Standard Handles



Hinged Standoffs



Screws



Hinged Handles



Standoffs



Spacers



Anti-Rotation Standoffs



Insulating Washers

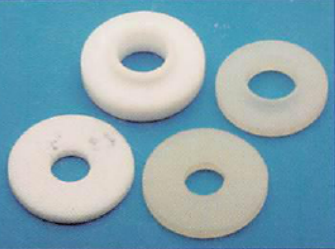

Contemporary Handles

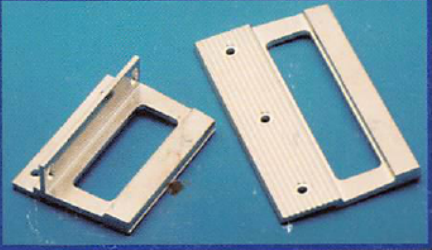

Positive Locking Handles



High-Tech Handles



AMATOM®

Toll Free: 800-243-6032 ▪ www.amatom.com

5 Pasco Hill Road ▪ Cromwell, CT 06416-1093 ▪ Phone: (860) 828-0847 ▪ Fax: (860) 828-0381

AMATOM® ELECTRONIC HARDWARE

COMPANY PROFILE

AMATOM Electronic Hardware is a manufacturer of mechanical packaging hardware used by all segments of the electronic industry. The AMATOM Catalog, or "Electronic Hardware Reference Manual," is a primary source of the design of packaging hardware and handles.

Factory Capabilities

Our manufacturing facility is located in Cromwell, Connecticut. We not only manufacture the product we sell, we also plate to a large variety of different plating finishes.

Selling Methods

AMATOM sells its products in the following ways:

- Manufacturers Representatives, who work closely with both engineering and purchasing to help with designing and procurement needs.
- Authorized Hardware Distributors, who are a select group of distributors carefully chosen to work closely with our factory to provide the utmost in customer service.

Factory Direct Customer Service/Sales Representatives

These individuals work with purchasing, engineering, authorized distribution, and field sales representatives to provide the ultimate in customer satisfaction.



AMATOM Electronic Hardware

SERVICE & QUALITY AT ITS BEST!

5 Pasco Hill Road • Cromwell, CT 06416-1093
Phone: 860-828-0847 • Call Toll Free: 800-243-6032 • Fax: 860-828-0381
Web Address: http://www.amatom.com • E-Mail: sales@amatom.com

AMATOM®

Table of Contents

Page

Standoffs and Spacers
- Specifications 4-8
- Post Type Standoffs (Internal Thread)
  - 3/16" to 5/8" Round, Hex and Square 10-19
- Spacers (Thru hole) 1/8" to 1/2" Round 20
- Swage Type Standoffs 5/32" to 1/4" Round Plus Hex 21-30
- Male/Female Post Type Standoffs 3/16" to 3/8" Round Plus Hex 31-34
- Jack Screws 3/16" Hex to 1/4" thru 1" Long 35
- Hinged Standoffs 3/16" to 3/8" Round 36-39
- Anti-Rotation Swage Standoffs 7/32" to 3/8" Round 40

Metric Standoffs and Spacers
- Specifications 43-44
- Post Type Standoffs (4.5mm - 13mm Round Plus Hex) 45-49
- Spacers (4.5mm - 13mm Round) 50
- Swage Type Standoffs (4.5mm - 8mm Round) 51-53
- Male/Female Standoffs (4.5mm - 10mm Hex) 54-56
- Anti-Rotation Standoffs (6mm - 10mm Round) 57-60

Captive Panel Hardware
- Specifications 65-66
- Captive Panel Screws 68-73, 75-79
- Captive Panel Washers 74
- Captive Panel Retainers 80-92

Handles and Ferrules
- Specifications 100-103
- Internal Threaded Handles (Non-Folding)
  - Round, Oval, Half Round and Rectangular 104-127
- Folding Handles (Freefall, 2, 3 and Infinite Position)
  - Round, Oval and Rectangular 128-154
- Offset Handles 155-158
- Slanted Handles 159-163
- Bar Handles 164-166
- Decorative Ferrules (For Round Handles) 169-170
- Contemporary Handles 171-173
- High-Tech Handles 174-175
- Locking Folding Handles 176-177
- Spring Loaded Folding Handles 178

Insulating Washers
- Specifications 181
- Flat Washers (Nylon, Phenolic, Teflon, Fiber) 183-188
- Shoulder Washers (Nylon, Phenolic, Teflon, Fiber) 189-236

Panel Bushings 237

Catches & Heavy Duty Handles 239-266

Cross Reference Charts 267-277

AMATOM®

Index

A. Post Type Standoffs (Internal Thread) Page

3/16" Round, Hex, Square from 1/8" thru 2" long 10
1/4" Round, Hex, Square from 1/8" thru 5" long 11-12
5/16" Round, Hex, Square from 1/8" thru 5" long 13-14
3/8" Round, Hex, Square from 1/8" thru 5" long, Hex 1/8" thru 10" long 15-17
1/2" Round and Hex 1/8" thru 7 1/4" long 18
5/8" Round, Hex, Square from 1/8" thru 5" long 19

B. Spacers (No Thread)

1/8" Round from 1/8" thru 1/2" long 20
3/16" Round from 1/8" thru 1" long 20
1/4" Round from 1/8" thru 2" long 20
5/16" Round from 1/8" thru 2" long 20
3/8" Round from 1/8" thru 2" long 20
1/2" Round from 1/8" thru 2" long 20

C. Swage Type Standoffs (Internal Thread)

5/32" Round and Hex from 1/8" above Panel thru 1" above Panel 21
3/16" Round and Hex (.125 Shank) from 1/8" above Panel thru 1" above Panel 22
3/16" Round and Hex (.139 Shank) from 1/8" above Panel thru 1" above Panel 23
1/4" Round and Hex (.138 Shank) from 1/8" above Panel thru 1" above Panel 24
1/4" Round (.188 Shank) from 1/8" above Panel thru 2" above Panel 25
1/4" Hex (.188 Shank) from 1/8" above Panel thru 2" above Panel 26
5/16" Round from 1/8" above Panel thru 2" above Panel 27
5/16" Hex from 1/8" above Panel thru 2" above Panel 28
3/8" Round from 1/8" above Panel thru 2" above Panel 29
3/8" Hex from 1/8" above Panel thru 2" above Panel 30

D. Male/Female Post Type Standoffs

3/16" Round and Hex from 3/16" thru 1" long "L" dim - Body length 31
1/4" Round and Hex from 1/4" thru 2" long "L" dim - Body length 32
3/8" Round from 1/4" thru 6" long "L" dim - Body length 33
3/8" Hex from 1/4" thru 6" long "L" dim - Body length 34

AMATOM®

Index

Page

E. Jack Screws

3/16" Hex Steel 3/16" long body with 1/4" thru 1" long 4-40 Male Thread 35

F. Hinged Standoffs

Female/Female (Internal Threads)

3/16" from 3/4" length overall thru 2" length overall.....36

1/4" from 3/4" length overall thru 2" length overall.....36

5/16" from 3/4" length overall thru 2" length overall.....37

3/8" from 3/4" length overall thru 2" length overall.....37

Male/Male (External Threads)

3/16" from 1/2" length overall thru 2" length overall.....38

1/4" from 1/2" length overall thru 2" length overall.....38

5/16" from 1/2" length overall thru 2" length overall.....38

3/8" from 1/2" length overall thru 2" length overall.....38

Special Order Hinged Standoffs 39

G. Anti-Rotation Swage Standoffs

7/32" from .065 above Panel thru 1" above panel 40

9/32" from .065 above Panel thru 1" above panel 40

11/32" from 1/8" above Panel thru 1" above panel 40

3/8" from 1/8" above Panel thru 1" above panel 40

FEDERAL SUPPLY CODE FOR MANUFACTURERS
FSCM (Cage)
1YGB8

AMATOM®

Part Number Code & Specifications

Materials Chart No. 2

Material	Code Letter	Material Specifications
Brass	B	Alloy 360, 353 ASTM B16
Aluminum	A	[1]QQ-A-225/3 (2011-T3) QQ-A-225/6 (2024-T4) QQ-A-225/8 (6061-T6) QQ-A-200/9 (6063-T5)
Stainless Steel	SS	ASTM A582
Steel	S	ASTM A108-81, C12L14
Nylon	N	[2]LP-410
Teflon	T	[2]Mil-P-14078 Mil-P-19468
Phenolic	PH	[3]Mil-P-79 Type PBE XXX (Paper Base)
Phenolic	PH-F	[3]Mil-P-79 Type FBE Grade CP-940 or 4 below Fabic Base
Delrin	D	LP-392
Fibre	F	Mil-F-1148A (Grade CH)
Poly Vinyl Chloride	PVC	ASTM D-1784

1. Depending upon application
2. Smallest Thread size recommended is 4-40
3. Mil-P-15035C

Thread Code Chart No. 3

Thread code is the 4 digit number assigned to the part number to designate the thread size of a part. All threads are Class 2 (A and B) (commercial)*.

Thread Size	AMATOM Thread Code	Thread Size	AMATOM Thread Code	Thread Size	AMATOM Thread Code
0-80	0080	5-44	0544	1/4-32	2532
1-64	0164	6-32	0632	5/16-18	3118
1-72	0172	6-40	0640	5/16-24	3124
2-56	0256	8-32	0832	3/8-16	3716
2-64	0264	8-36	0836	3/8-24	3724
3-48	0348	10-24	1024	3/8-32	3732
3-56	0356	10-32	1032	7/16-14	4314
4-40	0440	12-24	1224	7/16-20	4320
4-48	0448	1/4-20	2520	1/2-13	5013
5-40	0540	1/4-28	2528	1/2-20	5020

*Note: For special threads, contact Amatom Sales Office for Number.

Self Locking Hardware (No lockwashers required)

Amatom threaded hardware is available with HELI-COIL® inserts. (HELI-COIL® inserts not available in Teflon and Delrin parts.)

To specify parts requiring a HELI-COIL® locking insert - add the letters "HL" to the thread code, i.e. 80 XX - B - 0440HL

Unless otherwise specified HELI-COIL® inserts will be 1 1/2 x diam. of the thread.

(Prices available on application only.)

® Reg. U.S. Pat. Off

Length of Thread

Brass and Aluminum Parts

0-80 thread is tapped thru up to 3/8 in. length
2-56 thread is tapped thru up to 5/8 in. length
4-40 and larger threads are tapped thru up to 1 in. length

Stainless Steel, Nylon, Phenolic

0-80 thread is tapped thru up to 1/4 in. length
2-56 thread is tapped thru up to 3/8 in. length
4-40 thread is tapped thru up to 1/2 in. length
6-32 and larger threads are tapped thru up to 1 in. length

Standoffs with longer lengths than shown above will be tapped both ends to thread depths as indicated in Chart 3A.

NOTE: Standoffs and spacers from 1 1/16 thru 2" long may be manufactured from tubing or solid material at our discretion. If your requirement calls for solid material please specify TBE (tap both ends) when ordering.

Depth of Thread

Chart No. 3A

Recommended Blind Hole Thread Length in Standoffs
(Drilled and Tapped both ends)
Per Handbook H-28 (Part 1)
Screwthread Standards (Federal)

Thread Size	Screw Engagement	Thread Size	Screw Engagement
0-80	3/16	12-24	1/2
2-56	3/16	1/4-20	9/16
3-48	1/4	1/4-28	1/2
4-40	1/4	5/16-18	9/16
6-32	3/8	3/8-16	9/16
8-32	7/16	3/8-32	3/8
10-24	1/2	7/16-20	9/16
10-32	1/2		

Exceptions are noted on catalog pages where applicable.

Percentage of Thread

Chart 3B

Screw Thread Size	% of Thread Allowable	
	Roll, or Cold Form Tap	Cut Tap
2	55	56
4	55	57
6	55	66
8	55	58
10	55	59
12	55	63
1/4	55	67

Note: Parts will be made by both methods and are interchangeable, unless customer specifically requests otherwise.

5 Pasco Hill Road • Cromwell, CT 06416-1093
Phone: 860-828-0847 • Call Toll Free: 800-243-6032 • Fax: 860-828-0381
Web Address: http://www.amatom.com • E-Mail: sales@amatom.com

AMATOM®

Part Number Code & Specifications

Clearance Hole Code Chart No. 4

Clearance Code is the size of hole in a spacer, needed to clear the major diameter and not have a sloppy fit.

Thread Size	Clearance Hole Range	Clearance Hole Code	Thread Size	Clearance Hole Range	Clearance Hole Code
0-80	.062-.072	.063	10-24	.192-.202	.194
1-64	.075-.085	.076	10-32	.192-.202	.194
1-72	.075-.085	.076	12-24	.218-.228	.219
2-56	.088-.098	.091	1/4-20	.252-.262	.257
2-64	.088-.098	.091	1/4-28	.252-.262	.257
3-48	.101-.111	.104	5/16-18	.3145-.3245	.316
3-56	.101-.111	.104	5/16-24	.3145-.3245	.316
4-40	.114-.124	.115	3/8-16	.377-.387	.381
4-48	.114-.124	.115	3/8-24	.377-.387	.381
5-40	.127-.137	.129	3/8-32	.377-.387	.381
5-44	.127-.137	.129	7/16-14	.4395-.4495	7/16
6-32	.140-.150	.140	7/16-20	.4395-.4495	7/16
6-40	.140-.150	.140	1/2-13	.502-.512	1/2
8-32	.166-.176	.171	1/2-20	.502-.512	1/2
8-36	.166-.176	.171			

Note:

1. Size of Clearance Hole computed as follows:
   Minimum I.D.=Thread Major Diameter + .002
   Maximum I.D.=Thread Major Diameter +.012
2. For special clearance sizes not listed, designate the inside diameter required by .xxx of the decimal equivalent of size required.

Shank Length Code Chart No. 1

Code	Length of Shank	Panel Thickness	Code	Length of Shank	Panel Thickness
A	.075	1/32	D	.165	1/8
B	.105	1/16	E	.230	3/16
C	.135	3/32	F	.290	1/4

Properties

Property	Vulcanized Fibre	Nylon 101	Teflon	Phenolic		Delrin Acetal
				XXXP	LE	
Tensile Strength psi	6,000-12,000	11,200-16,500	2,700-3,100	13,500	10,000-14,000	10,000
Compressive Strength psi	20,000-30,000	4,000-11,000	700-1,200	36,000	37,000	18,000
Heat Resistance (continuous °F)	221	250	550	250-275	225-250	250
Dielectric Constant (60 cycles)	4-7	10	2.1			3.7
Dielectric Strength 1/8 thickness (v/mil)	150	300-400	400	325	225	500
Arc Resistance (Sec)	80	140	200	10	10	129
Water Absorption 24 hrs (%)	15-25	1.5	.00	.5	1.8	.12
Rockwell Hardness	R Scale 80	107-119	R-58	M110	M113	R120
Flammability (in/min) .125 in.		Self-Ext.	Non-Flam.			1.1
Specific Gravity	1.0-1.5	1.13-1.14	2.13	1.35	1.33	1.42

Information listed above was obtained from charts submitted by various manufacturers. We believe this information to be accurate, but since test methods vary, their validity cannot be verified. This chart is compiled for information purposes only.

Tolerances - Functionability

Tolerances in manufacture of standoffs and spacers

Diameter:
±.006
except where
otherwise noted

Length:
1. Up to 4" long all are kept to ±.005
2. 4" to 6" long ±.008
3. Over 6": long ±.010
4. Nylon Parts ±.015

Amatom reserves the right to make adjustments in dimensions and specifications at any time without notice. Customer's inspection should be determined primarily on functionability.

5 Pasco Hill Road • Cromwell, CT 06416-1093
Phone: 860-828-0847 • Call Toll Free: 800-243-6032 • Fax: 860-828-0381
Web Address: http://www.amatom.com • E-Mail: sales@amatom.com



Externally threaded products made from Brass or Steel

i.e. Male/female standoffs or captive screws

AMATOM®



The external threads are manufactured to a pre-plated condition to accommodate the plating process. Unplated parts will accept the standard no-go gauge.

AMATOM®



On a special order basis, Amatom will manufacture these products for applications that do not require plating, and will not be made to a pre-plated condition.

5 Pasco Hill Road • Cromwell, CT 06416-1093
Phone: 860-828-0847 • Call Toll Free: 800-243-6032 • Fax: 860-828-0381
Web Address: http://www.amatom.com • E-Mail: sales@amatom.com

AMATOM®

Specifications

Anti-Rotation Swage Standoffs

3-4 times more holding power than conventional standoffs. The Amatom high torque (anti-rotation) swage standoff is designed primarily for installation in epoxy glass, phenolic boards and aluminum panels or chassis. This broaching type standoff literally cuts its way down into the mounting material, biting in for torque resistance. The knurled shank feature eliminates electrical connection breaks due to loosening and spinning of the standoff under high torque conditions.

Performance Data
Average Torque Load (inch-pounds)

Method of Installation	4-40 Thread	6-32 Thread	8-32 Thread	10-24 Thread	10-32 Thread
Straight Hole	35	40	50	50	70

Your torque loads may vary due to differences in installation parameters.
Tests performed on Epoxy Glass G10 boards.

Methods of Installation

1. Select proper hole size (straight hole):

Anti-Rotation Swage					
Thread Size	4-40	6-32	8-32	10-24	10-32
Shank Dia. "C" Dim.	.179	.226	.263	.285	.285
Hole Dia. +.005-.000	.166	.213	.250	.272	.272

Plain Swage
Hole Diameter same as shank +.003 -.000
O.D. Tol.

2. Swage or flare as required:

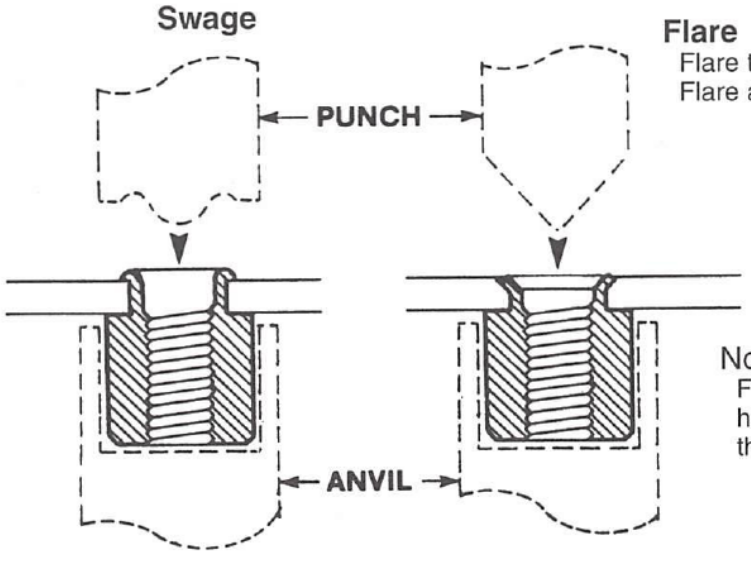

Flare
Flare tool supplied by customer.
Flare angle same as countersink.

Note:
For flush flaring into countersunk hole use shank length .020" shorter than board thickness

Tool part numbers for swaging are listed along with anti-rotation and swage standoff part descriptions.

5 Pasco Hill Road • Cromwell, CT 06416-1093
Phone: 860-828-0847 • Call Toll Free: 800-243-6032 • Fax: 860-828-0381
Web Address: http://www.amatom.com • E-Mail: sales@amatom.com

AMATOM®

Part Number Code

Finishes Available

ALUM (A)		Notes
0	No Finish	A
1A	Anodize-Mil-A-8625 Type 1 (Chromic) Hot Water Seal (Dk. Grey)	
1B	Anodize-Mil-A-8625 Type 2 (Sulphuric) Hot Water Seal (Clear)	
1C	Anodize-Mil-A-8625 Type 2 (Sulphuric) Dichromate Seal (Yellow/Green)	
2	Anodize-Mil-A-8625 Black Type 2	
8	Caustic Etch	
9	Caustic Etch and Lacquer	
10	Alodine 1200	
16	Iridite-Clear-Mil-C-5541	
17	Iridite-Gold-Mil-C-5541	

STEEL (S)		
0	No Finish	
3	Cadmium Plate-QQ-P-416 Class 3 -Clear Chromate Special Order	
3B	Cadmium plate-QQ-P-416 Class 3, Type 2-Color Chromate Special Order	
4	Nickel Plate QQ-N-290, A Grade F	
14	Electro Tin Plate-Mil-T-10727-Type I	
14A	Electro Tin Solder 60/40 Per M230 Mil-F-14072	B
28	Zinc Plate .0002 thick-ASTM-B-633 Type I	
37	Zinc Plate .0002 thick-ASTM-B-633 Type II (Color Chromate)	

Notes: (A.) Standard Finish for stocked parts.
(B.) Not suitable for 2-56 or smaller threads specify oversized tap when ordering thread sizes.

BRASS (B)		Notes
0	No Finish	
3	Cadmium Plate-QQ-P-416 Class 1 -Clear Chromate Special Order	
3B	Cadmium Plate-QQ-P-416 Class 3, Type 2-Color Chromate Special Order	
4	Nickel plate QQN-290 A Grade G	
6A	Brass Ebonal "C" (Black) Mil-F-495	
14	Electro Tin Plate-Mil-T-10727-Type I	
14A	Electro Tin Solder 60/40 per M230 Mil-F-14072	B
15	Bright Dip (Brass Finish)	
28	Zinc Plate .0002 thick-ASTM-B-633 Type I	A
37	Zinc Plate .0002 thick-ASTM-B-633 Type II (Color Chromate)	

Note: Brass parts stocked with Zinc Plate finish-28. Refer to chart above for other finishes required. Finish #3 and 3B available on special order.

STAINLESS STEEL (SS)		
6B	Stainless Steel "Black Oxide" Mil-C-13924	
7	Passivate-QQ-P-35	A

PHENOLIC (PH)(PHF)		
0	No Finish	A
30	Moisture and Fungus Resistant Finish Mil-V-173	

NYLON (N)

Plain-No finish

5 Pasco Hill Road • Cromwell, CT 06416-1093
Phone: 860-828-0847 • Call Toll Free: 800-243-6032 • Fax: 860-828-0381
Web Address: http://www.amatom.com • E-Mail: sales@amatom.com

AMATOM®



POST STANDOFFS
SPACERS
SWAGE STANDOFFS
MALE/FEMALE STANDOFFS
JACK SCREWS
HINGED STANDOFFS
ANTI-ROTATION STANDOFFS

ELECTRONIC HARDWARE
REFERENCE MANUAL

Call Toll Free

From anywhere in the USA Call Cromwell, CT **1-800-243-6032**

AMATOM ELECTRONIC HARDWARE
5 Pasco Hill Road
Cromwell, CT 06416-1093
860-828-0847
Fax: 860-828-0381
E-Mail: sales@amatom.com
Web Address: http://www.amatom.com

STANDOFFS and SPACERS

STANDOFFS 3/16"

ROUND • HEX • SQUARE

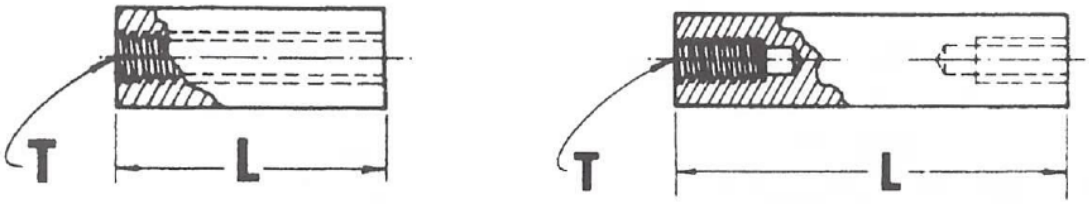

BREAK EDGES
C'SK I.D.

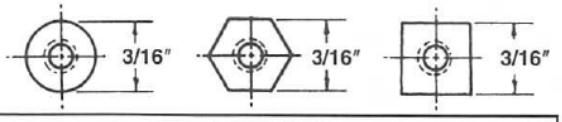

LENGTH	PART NO.		
	ROUND	HEX	SQUARE
1/8	8075	8100	8125
3/16	8076	8101	8126
1/4	8077	8102	8127
5/16	8078	8103	8128
3/8	8079	8104	8129
7/16	8080	8105	8130
1/2	8081	8106	8131
9/16	8082	8107	8132
5/8	8083	8108	8133
3/4	8084	8109	8134
7/8	8085	8110	8135
1	8086	8111	8136
1-1/16	8087	8112	8137
1-1/8	8088	8113	8138
1-3/16	8089	8114	8139
1-1/4	8090	8115	8140
1-5/16	8091	8116	8141
1-3/8	8092	8117	8142
1-7/16	8093	8118	8143
1-1/2	8094	8119	8144
1-9/16	8095	8120	8145
1-5/8	8096	8121	8146
1-3/4	8097	8122	8147
1-7/8	8098	8123	8148
2	8099	8124	8149

PART NUMBER ORDERING SYSTEM

XXXX - X - XXXX - XX

PART NO. | MATERIAL | THREAD | FINISH

Refer to page 4 for Thread Depth.
Refer to page 8 for Finish Codes.
For parts not listed contact sales office.

THREAD CODE	
THREAD	CODE
2-56	0256
4-40	0440

MATERIAL	CODE
Aluminum	A
Brass	B
Steel	S
Stainless Steel	SS
Nylon (square not available)	N

5 Pasco Hill Road • Cromwell, CT 06416-1093
Phone: 860-828-0847 • Call Toll Free: 800-243-6032 • Fax: 860-828-0381
Web Address: http://www.amatom.com • E-Mail: sales@amatom.com

STANDOFFS 1/4"
ROUND • HEX • SQUARE

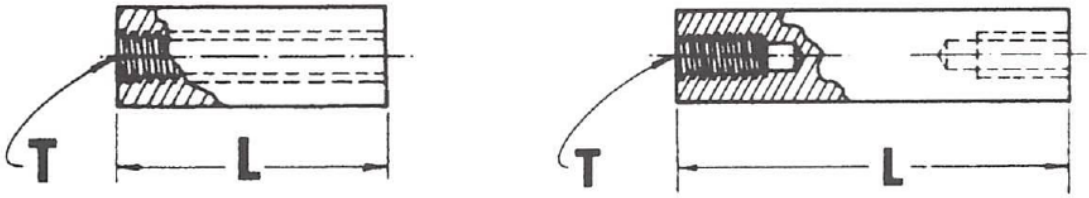

BREAK EDGES
C'SK I.D.

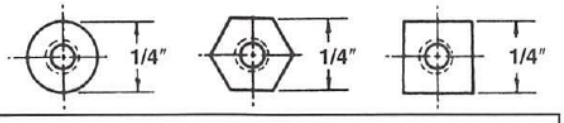

LENGTH	PART NO. ROUND	HEX	SQUARE
1/8	8150	8209	8269
3/16	8151	8210	8270
1/4	8152	8211	8271
5/16	8153	8212	8272
3/8	8154	8213	8273
7/16	8155	8214	8274
1/2	8156	8215	8275
9/16	8157	8216	8276
5/8	8158	8217	8277
3/4	8159	8218	8278
7/8	8160	8219	8279
1	8161	8220	8280
1-1/16	8162	8221	8281
1-1/8	8163	8222	8282
1-3/16	8164	8223	8283
1-1/4	8165	8224	8284
1-5/16	8166	8225	8285
1-3/8	8167	8226	8286
1-7/16	8168	8227	8287
1-1/2	8169	8228	8288

continued on next page

Refer to page 4 for Thread Depth.
Refer to page 8 for Finish Codes.
For parts not listed contact sales office.

PART NUMBER ORDERING SYSTEM

XXXX - X - XXXX - XX

PART NO. | THREAD | MATERIAL | FINISH

THREAD CODE	
THREAD	CODE
4-40	0440
6-32	0632
8-32	0832
10-32	1032

MATERIAL	CODE
Aluminum	A
Brass	B
Stainless Steel	SS
Nylon	N
†Phenolic	PH

†Phenolic - PH (Paper Base)

5 Pasco Hill Road • Cromwell, CT 06416-1093
Phone: 860-828-0847 • Call Toll Free: 800-243-6032 • Fax: 860-828-0381
Web Address: http://www.amatom.com • E-Mail: sales@amatom.com

STANDOFFS 1/4"
ROUND • HEX • SQUARE

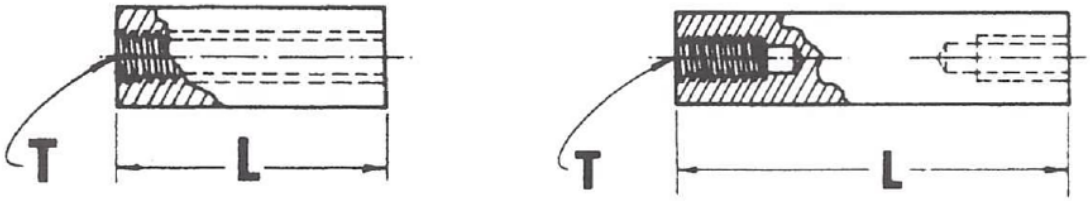

BREAK EDGES
C'SK I.D.

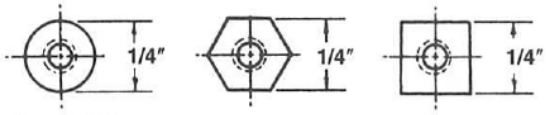

continued from previous page

LENGTH	PART NO. ROUND	HEX	SQUARE
1-9/16	8170	8229	8289
1-5/8	8171	8230	8290
1-3/4	8172	8231	8291
1-7/8	8173	8232	8292
2	8174	8233	8293
2-1/8	8175	8234	8294
2-1/4	8176	8235	8295
2-3/8	8177	8236	8296
2-1/2	8178	8237	8297
2-3/4	8179	8238	8298
3	8180	8239	8299
3-1/4	8181	8240	8300
3-1/2	8182	8241	8301
3-3/4	8183	8242	8302
4	8184	8243	8303
4-1/4	8185	8244	8304
4-1/2	8186	8245	8305
4-3/4	8187	8246	8306
5	8188	8247	8307

Refer to page 4 for Thread Depth.
Refer to page 8 for Finish Codes.
For parts not listed contact sales office.

PART NUMBER ORDERING SYSTEM

XXXX - X - XXXX - XX

PART NO. | THREAD | MATERIAL | FINISH

THREAD CODE	
THREAD	CODE
4-40	0440
6-32	0632
8-32	0832
10-32	1032

MATERIAL	CODE
Aluminum	A
Brass	B
Stainless Steel	SS
Nylon	N
†Phenolic	PH

†Phenolic - PH (Paper Base)

5 Pasco Hill Road • Cromwell, CT 06416-1093
Phone: 860-828-0847 • Call Toll Free: 800-243-6032 • Fax: 860-828-0381
Web Address: http://www.amatom.com • E-Mail: sales@amatom.com

STANDOFFS 5/16″
ROUND • HEX • SQUARE

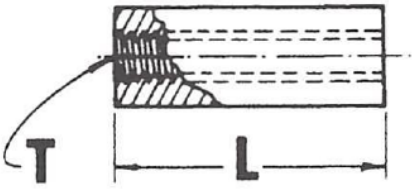

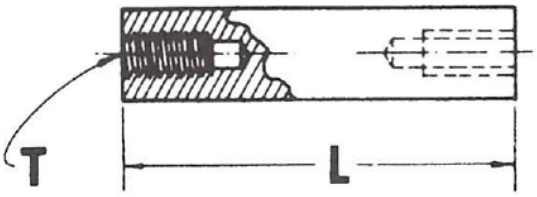

BREAK EDGES
C'SK I.D.

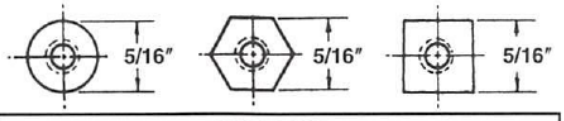

LENGTH	PART NO. ROUND	HEX	SQUARE
1/8	8329	8388	8448
3/16	8330	8389	8449
1/4	8331	8390	8450
5/16	8332	8391	8451
3/8	8333	8392	8452
7/16	8334	8393	8453
1/2	8335	8394	8454
9/16	8336	8395	8455
5/8	8337	8396	8456
3/4	8338	8397	8457
7/8	8339	8398	8458
1	8340	8399	8459
1-1/16	8341	8400	8460
1-1/8	8342	8401	8461
1-3/16	8343	8402	8462
1-1/4	8344	8403	8463
1-5/16	8345	8404	8464
1-3/8	8346	8405	8465
1-7/16	8347	8406	8466
1-1/2	8348	8407	8467

continued on next page

Refer to page 4 for Thread Depth.
Refer to page 8 for Finish Codes.
For parts not listed contact sales office.

PART NUMBER ORDERING SYSTEM

XXXX - X - XXXX - XX

PART NO. | THREAD | MATERIAL | FINISH

THREAD CODE	
THREAD	CODE
4-40	0440
6-32	0632
8-32	0832
10-32	1032

MATERIAL	CODE
Aluminum	A
Brass	B
Stainless Steel	SS
Nylon (square not available)	N
†Phenolic	PH

†Phenolic - PH (Paper Base)

5 Pasco Hill Road • Cromwell, CT 06416-1093
Phone: 860-828-0847 • Call Toll Free: 800-243-6032 • Fax: 860-828-0381
Web Address: http://www.amatom.com • E-Mail: sales@amatom.com

STANDOFFS 5/16"
ROUND • HEX • SQUARE

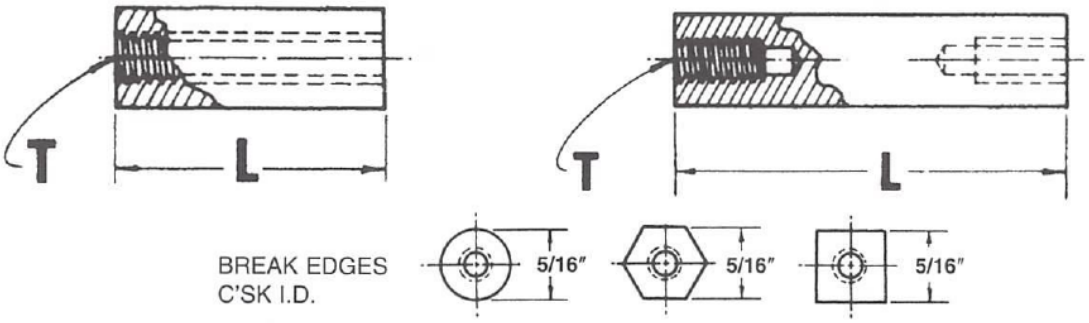

continued from previous page

LENGTH	PART NO. ROUND	HEX	SQUARE
1-9/16	8349	8408	8468
1-5/8	8350	8409	8469
1-3/4	8351	8410	8470
1-7/8	8352	8411	8471
2	8353	8412	8472
2-1/8	8354	8413	8473
2-1/4	8355	8414	8474
2-3/8	8356	8415	8475
2-1/2	8357	8416	8476
2-3/4	8358	8417	8477
3	8359	8418	8478
3-1/4	8360	8419	8479
3-1/2	8361	8420	8480
3-3/4	8362	8421	8481
4	8363	8422	8482
4-1/4	8364	8423	8483
4-1/2	8365	8424	8484
4-3/4	8366	8425	8485
5	8367	8426	8486

Refer to page 4 for Thread Depth.
Refer to page 8 for Finish Codes.
For parts not listed contact sales office.

PART NUMBER ORDERING SYSTEM

XXXX - X - XXXX - XX

PART NO. | MATERIAL | THREAD | FINISH

THREAD CODE	
THREAD	CODE
4-40	0440
6-32	0632
8-32	0832
10-32	1032

MATERIAL	CODE
Aluminum	A
Brass	B
Stainless Steel	SS
Nylon (square not available)	N
†Phenolic	PH

†Phenolic - PH (Paper Base)

5 Pasco Hill Road • Cromwell, CT 06416-1093
Phone: 860-828-0847 • Call Toll Free: 800-243-6032 • Fax: 860-828-0381
Web Address: http://www.amatom.com • E-Mail: sales@amatom.com

STANDOFFS 3/8″
ROUND • HEX • SQUARE

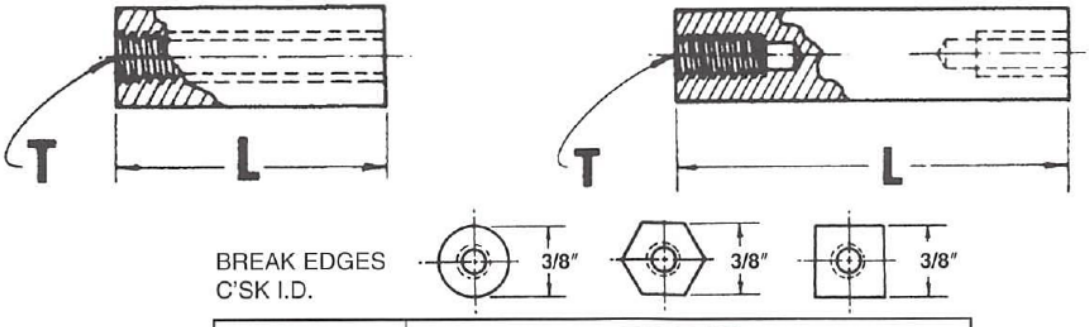

BREAK EDGES
C'SK I.D.

LENGTH	PART NO. ROUND	HEX	SQUARE
1/8	8508	8567	8627
3/16	8509	8568	8628
1/4	8510	8569	8629
5/16	8511	8570	8630
3/8	8512	8571	8631
7/16	8513	8572	8632
1/2	8514	8573	8633
9/16	8515	8574	8634
5/8	8516	8575	8635
3/4	8517	8576	8636
7/8	8518	8577	8637
1	8519	8578	8638
1-1/16	8520	8579	8639
1-1/8	8521	8580	8640
1-3/16	8522	8581	8641
1-1/4	8523	8582	8642
1-5/16	8524	8583	8643
1-3/8	8525	8584	8644
1-7/16	8526	8585	8645
1-1/2	8527	8586	8646

continued on next page

Refer to page 4 for Thread Depth.
Refer to page 8 for Finish Codes.
For parts not listed contact sales office.

PART NUMBER ORDERING SYSTEM

XXXX - X - XXXX - XX

PART NO. | MATERIAL | THREAD | FINISH

THREAD CODE	
THREAD	CODE
6-32	0632
8-32	0832
10-32	1032

MATERIAL	CODE
Aluminum	A
Brass	B
Stainless Steel	SS
Nylon (square not available)	N
†Phenolic	PH

†Phenolic - PH (Paper Base)

5 Pasco Hill Road • Cromwell, CT 06416-1093
Phone: 860-828-0847 • Call Toll Free: 800-243-6032 • Fax: 860-828-0381
Web Address: http://www.amatom.com • E-Mail: sales@amatom.com

STANDOFFS 3/8"

ROUND • HEX • SQUARE

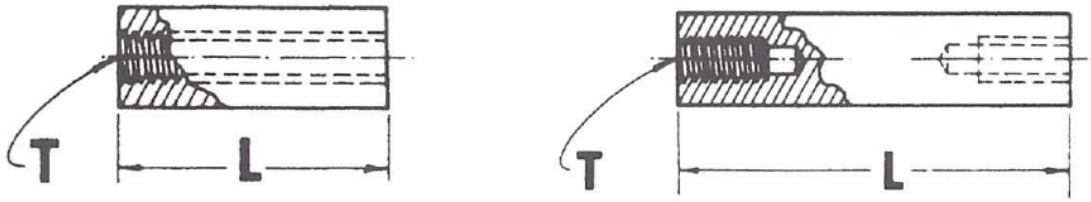

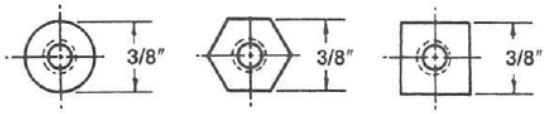

continued from previous page

LENGTH	PART NO. ROUND	HEX	SQUARE
1-9/16	8528	8587	8647
1-5/8	8529	8588	8648
1-3/4	8530	8589	8649
1-7/8	8531	8590	8650
2	8532	8591	8651
2-1/8	8533	8592	8652
2-1/4	8534	8593	8653
2-3/8	8535	8594	8654
2-1/2	8536	8595	8655
2-3/4	8537	8596	8656
3	8538	8597	8657
3-1/4	8539	8598	8658
3-1/2	8540	8599	8659
3-3/4	8541	8600	8660
4	8542	8601	8661
4-1/4	8543	8602	8662
4-1/2	8544	8603	8663
4-3/4	8545	8604	8664
5	8546	8605	8665

continued on next page

Refer to page 4 for Thread Depth.
Refer to page 8 for Finish Codes.
For parts not listed contact sales office.

PART NUMBER ORDERING SYSTEM

XXXX - X - XXXX - XX

PART NO. | MATERIAL | THREAD | FINISH

THREAD CODE	
THREAD	CODE
6-32	0632
8-32	0832
10-32	1032

MATERIAL	CODE
Aluminum	A
Brass	B
Stainless Steel	SS
Nylon (square not available)	N
†Phenolic	PH

†Phenolic - PH (Paper Base)

5 Pasco Hill Road • Cromwell, CT 06416-1093
Phone: 860-828-0847 • Call Toll Free: 800-243-6032 • Fax: 860-828-0381
Web Address: http://www.amatom.com • E-Mail: sales@amatom.com

STANDOFFS 3/8″
ROUND • HEX • SQUARE

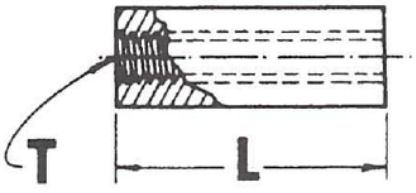

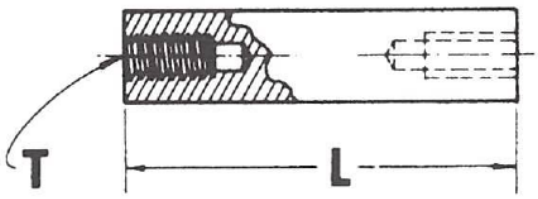

BREAK EDGES
C'SK I.D.

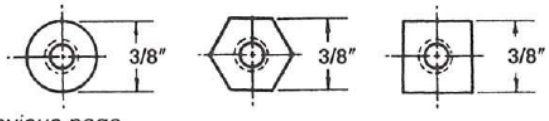

continued from previous page

LENGTH	PART NO. ROUND	HEX	SQUARE
5-1/4	8547	8606	8666
5-1/2	8548	8607	8667
5-3/4	8549	8608	8668
6	8550	8609	8669
6-1/4	8551	8610	8670
6-1/2	8552	8611	8671
6-3/4	8553	8612	8672
7	8554	8613	8673
7-1/4	8555	8614	8674
7-1/2	8556	8615	8675
7-3/4	8557	8616	8676
8	8558	8617	8677
8-1/4	8559	8618	8678
8-1/2	8560	8619	8679
8-3/4	8561	8620	8680
9	8562	8621	8681
9-1/4	8563	8622	8682
9-1/2	8564	8623	8683
9-3/4	8565	8624	8684
10	8566	8625	8685

Refer to page 4 for Thread Depth.
Refer to page 8 for Finish Codes.
For parts not listed contact sales office.

PART NUMBER ORDERING SYSTEM

XXXX - X - XXXX - XX

PART NO. | THREAD | MATERIAL | FINISH

THREAD CODE	
THREAD	CODE
6-32	0632
8-32	0832
10-32	1032

MATERIAL	CODE
Aluminum	A
Brass	B
Stainless Steel	SS
Nylon (square not available)	N
†Phenolic	PH

†Phenolic - PH (Paper Base)

5 Pasco Hill Road • Cromwell, CT 06416-1093
Phone: 860-828-0847 • Call Toll Free: 800-243-6032 • Fax: 860-828-0381
Web Address: http://www.amatom.com • E-Mail: sales@amatom.com

STANDOFFS 1/2"

ROUND • HEX

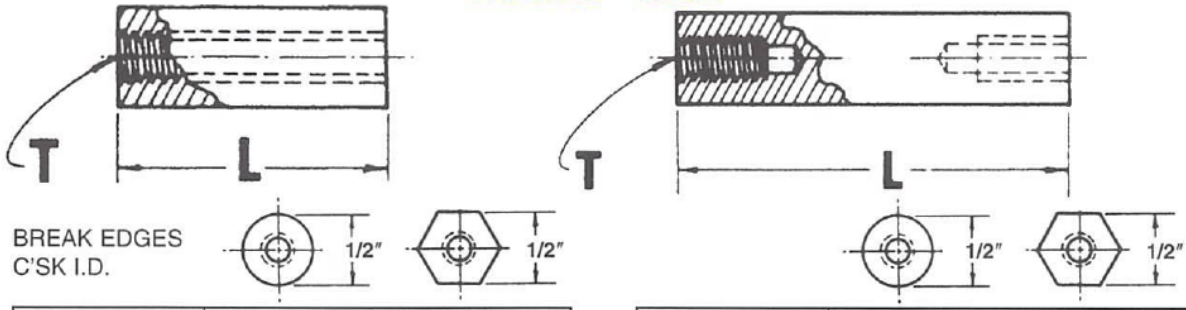

LENGTH	PART NO. ROUND	PART NO. HEX
1/8	8686	8745
3/16	8687	8746
1/4	8688	8747
5/16	8689	8748
3/8	8690	8749
7/16	8691	8750
1/2	8692	8751
9/16	8693	8752
5/8	8694	8753
3/4	8695	8754
7/8	8696	8755
1	8697	8756
1-1/16	8698	8757
1-1/8	8699	8758
1-3/16	8700	8759
1-1/4	8701	8760
1-5/16	8702	8761
1-3/8	8703	8762
1-7/16	8704	8763
1-1/2	8705	8764
1-9/16	8706	8765
1-5/8	8707	8766
1-3/4	8708	8767
1-7/8	8709	8768

LENGTH	PART NO. ROUND	PART NO. HEX
2	8710	8769
2-1/8	8711	8770
2-1/4	8712	8771
2-3/8	8713	8772
2-1/2	8714	8773
2-3/4	8715	8774
3	8716	8775
3-1/4	8717	8776
3-1/2	8718	8777
3-3/4	8719	8778
4	8720	8779
4-1/4	8721	8780
4-1/2	8722	8781
4-3/4	8723	8782
5	8724	8783
5-1/4	8725	8784
5-1/2	8726	8785
5-3/4	8727	8786
6	8728	8787
6-1/4	8729	8788
6-1/2	8730	8789
6-3/4	8731	8790
7	8732	8791
7-1/4	8733	8792

Refer to page 4 for Thread Depth.
Refer to page 8 for Finish Codes.
For parts not listed contact sales office.

PART NUMBER ORDERING SYSTEM

XXXX - X - XXXX - XX

PART NO. | MATERIAL | THREAD | FINISH

THREAD CODE	
THREAD	CODE
8-32	0832
10-32	1032
12-24	1224
1/4-20	2520

MATERIAL	CODE
Aluminum	A
Brass	B
Stainless Steel	SS
Nylon	N
†Phenolic (round only)	PH

†Phenolic - PH (Paper Base)

5 Pasco Hill Road • Cromwell, CT 06416-1093
Phone: 860-828-0847 • Call Toll Free: 800-243-6032 • Fax: 860-828-0381
Web Address: http://www.amatom.com • E-Mail: sales@amatom.com

STANDOFFS 5/8"
ROUND • HEX

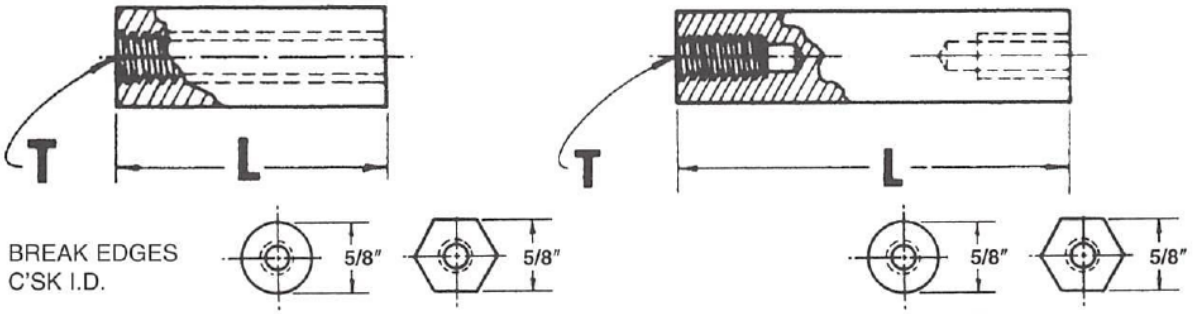

LENGTH	PART NO. ROUND	PART NO. HEX
1/8	8863	8922
3/16	8864	8923
1/4	8865	8924
5/16	8866	8925
3/8	8867	8926
7/16	8868	8927
1/2	8869	8928
9/16	8870	8929
5/8	8871	8930
3/4	8872	8931
7/8	8873	8932
1	8874	8933
1-1/16	8875	8934
1-1/8	8876	8935
1-3/16	8877	8936
1-1/4	8878	8937
1-5/16	8879	8938
1-3/8	8880	8939
1-7/16	8881	8940
1-1/2	8882	8941

LENGTH	PART NO. ROUND	PART NO. HEX
1-9/16	8883	8942
1-5/8	8884	8943
1-3/4	8885	8944
1-7/8	8886	8945
2	8887	8946
2-1/8	8888	8947
2-1/4	8889	8948
2-3/8	8890	8949
2-1/2	8891	8950
2-3/4	8892	8951
3	8893	8952
3-1/4	8894	8953
3-1/2	8895	8954
3-3/4	8896	8955
4	8897	8956
4-1/4	8898	8957
4-1/2	8899	8958
4-3/4	8900	8959
5	8901	8960

PART NUMBER ORDERING SYSTEM

XXXX - X - XXXX - XX

PART NO. | THREAD | MATERIAL | FINISH

Refer to page 4 for Thread Depth.
Refer to page 8 for Finish Codes.
For parts not listed contact sales office.

THREAD CODE	
THREAD	CODE
10-32	1032
12-24	1224
1/4-20	2520
5/16-18	3118

MATERIAL	CODE
Aluminum	A
Brass	B
Stainless Steel	SS
Nylon	N
†Phenolic (round only)	PH

†Phenolic - PH (Paper Base)

5 Pasco Hill Road • Cromwell, CT 06416-1093
Phone: 860-828-0847 • Call Toll Free: 800-243-6032 • Fax: 860-828-0381
Web Address: http://www.amatom.com • E-Mail: sales@amatom.com

ROUND SPACERS

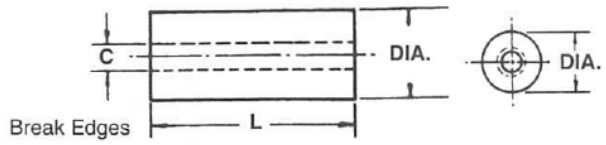

LENGTH	PART NO. 1/8" DIA	3/16" DIA	1/4" DIA	5/16" DIA	3/8" DIA	1/2" DIA
SCREW SIZE: NO.	2	2,4	2,4,6,8	4,6,8,10	6,8,10	6,8,10,12,1/4
1/8	9200	9207	9222	9284	9315	9253
3/16	9201	9208	9223	9285	9316	9254
1/4	9202	9209	9224	9286	9317	9255
5/16	9203	9210	9225	9287	9318	9256
3/8	9204	9211	9226	9288	9319	9257
7/16	9205	9212	9227	9289	9320	9258
1/2	9206	9213	9228	9290	9321	9259
9/16		9214	9229	9291	9322	9260
5/8		9215	9230	9292	9323	9261
11/16		9216	9231	9293	9324	9262
3/4		9217	9232	9294	9325	9263
13/16		9218	9233	9295	9326	9264
7/8		9219	9234	9296	9327	9265
15/16		9220	9235	9297	9328	9266
1		9221	9236	9298	9329	9267
1-1/16			9237	9299	9330	9268
1-1/8			9238	9300	9331	9269
1-3/16			9239	9301	9332	9270
1-1/4			9240	9302	9333	9271
1-5/16			9241	9303	9334	9272
1-3/8			9242	9304	9335	9273
1-7/16			9243	9305	9336	9274
1-1/2			9244	9306	9337	9275
1-9/16			9245	9307	9338	9276
1-5/8			9246	9308	9339	9277
1-11/16			9247	9309	9340	9278
1-3/4			9248	9310	9341	9279
1-13/16			9249	9311	9342	9280
1-7/8			9250	9312	9343	9281
1-15/16			9251	9313	9344	9282
2			9252	9314	9345	9283

Note: Maximum and minimum I.D. on all standard Amatom spacers will conform to clearance hole range Chart No. 4 shown on page 5.

Note: All spacers can be supplied in hex or square materials.

Refer to page 8 for Finish Codes.

Please contact sales office for parts not listed.

PART NUMBER ORDERING SYSTEM

XXXX - X - XXX - XX

PART NO. | CLEARANCE HOLE CODE | MATERIAL | FINISH

SCREW SIZE/I.D. CODE					
No.	I.D.	Code	No.	I.D.	Code
2	.091	091	10	.194	194
4	.115	115	12	.219	219
6	.140	140	1/4	.257	257
8	.171	171			

MATERIAL	CODE
Aluminum	A
Brass	B
Steel	S
Stainless Steel	SS
Nylon	N
Phenolic (not available in 1/8")	PH

5 Pasco Hill Road • Cromwell, CT 06416-1093
Phone: 860-828-0847 • Call Toll Free: 800-243-6032 • Fax: 860-828-0381
Web Address: http://www.amatom.com • E-Mail: sales@amatom.com

SWAGE TYPE ROUND • HEX STANDOFFS 5/32"

All Swage type standoffs through 1" long can be supplied as a swage type spacer. Pick out the diameter, length and swage you need; find the part number and change the thread to hole size. Example: You need a 1/4 OD brass x 1/2 long body for a 1/16 board with clearance for a no. 6 screw. Standard part number is 9537B-B-0632. Change part number to 9537B-B-140.

Use chart on page 5 to determine correct clearance hole code

Please Note: Selected Hole size cannot be larger than counterbore diameter.

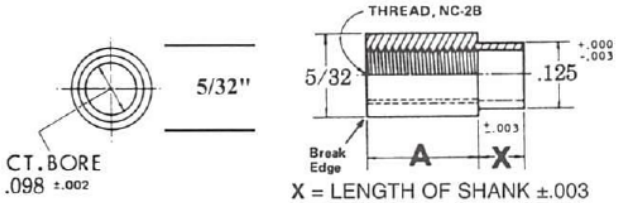

X = LENGTH OF SHANK ±.003
T = THICKNESS OF PANEL
A = LENGTH OF STANDOFF ±.005

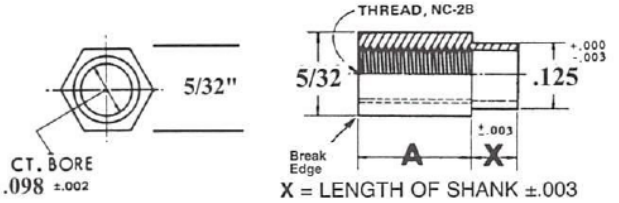

X = LENGTH OF SHANK ±.003
T = THICKNESS OF PANEL
A = LENGTH OF STANDOFF ±.005

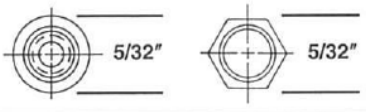

A	Part No.	
Length	Round	Hex
1/8	9505	9598
3/16	9506	9599
1/4	9507	9600
5/16	9508	9601
3/8	9509	9602
7/16	9510	9603
1/2	9511	9604
9/16	9512	9605
5/8	9513	9606
11/16	9514	9607
3/4	9515	9608
7/8	9516	9609
1	9517	9610

Round Swage Tooling		
Punch	Anvil	Body Length
PSP 638	PSA 139-1	1/8-3/16
	139-2	1/4-7/16
	139-3	1/2-11/16
	139-4	3/4-1"

Hex Swage Tooling		
Punch	Anvil	Body Length
PSP 638	PSA 139-1H	1/8-3/16
	139-2H	1/4-7/16
	139-3H	1/2-11/16
	139-4H	3/4-1"

Refer to page 4 for Thread Depth.
Refer to page 7 for installation instructions.
Refer to page 8 for Finish Codes.
For parts not listed contact sales office.

PART NUMBER ORDERING SYSTEM

XXXXX - X - XXXX- XX

PART NO. | MATERIAL | FINISH
SHANK
THREAD

SHANK/BOARD THICKNESS CODE		
X	T	
Shank ±.003	Board Thickness	Code
.075	1/32	A
.105	1/16	B
.135	3/32	C
.165	1/8	D
.230	3/16	E
.290	1/4	F

MATERIAL	CODE
Aluminum	A
Brass	B
Steel	S
Stainless Steel	SS

THREAD CODE	
THREAD	CODE
2-56	0256

5 Pasco Hill Road • Cromwell, CT 06416-1093
Phone: 860-828-0847 • Call Toll Free: 800-243-6032 • Fax: 860-828-0381
Web Address: http://www.amatom.com • E-Mail: sales@amatom.com

AMATOM®

SWAGE TYPE ROUND • HEX STANDOFFS 3/16" - .125 SHANK

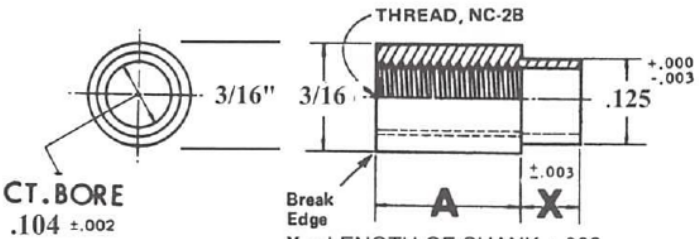

X = LENGTH OF SHANK ±.003
T = THICKNESS OF PANEL
A = LENGTH OF STANDOFF ±.005

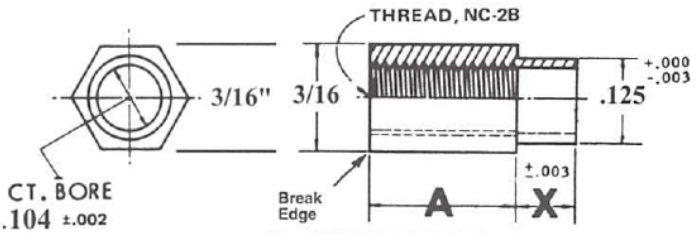

X = LENGTH OF SHANK ±.003
T = THICKNESS OF PANEL
A = LENGTH OF STANDOFF ±.005

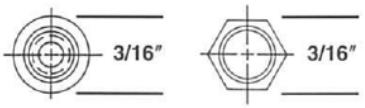

A Length	Part No. Round	Part No. Hex
1/8	9687	9696
3/16	9688	9697
1/4	9689	9698
5/16	9690	9699
3/8	9691	9700
1/2	9692	9701
5/8	9693	9702
3/4	9694	9703
1	9695	9704

Note: For swage type spacer see code page 21.

Round Swage Tooling		
Punch	Anvil	Body Length
PSP 638	PSA 201-1	1/8-3/16
	201-2	1/4-7/16
	201-3	1/2-11/16
	201-4	3/4-1"

Hex Swage Tooling		
Punch	Anvil	Body Length
PSP 638	PSA 201-1H	1/8-3/16
	201-2H	1/4-7/16
	201-3H	1/2-11/16
	201-4H	3/4-1"

Refer to page 4 for Thread Depth.
Refer to page 7 for installation instructions.
Refer to page 8 for Finish Codes.
For parts not listed contact sales office.

PART NUMBER ORDERING SYSTEM

XXXX**X** - X - XXXX- XX

PART NO. | SHANK | MATERIAL | THREAD | FINISH

SHANK/BOARD THICKNESS CODE		
X Shank ±.003	T Board Thickness	Code
.075	1/32	A
.105	1/16	B
.135	3/32	C
.165	1/8	D
.230	3/16	E
.290	1/4	F

MATERIAL	CODE
Aluminum	A
Brass	B
Steel	S
Stainless Steel	SS

THREAD CODE	
THREAD	CODE
2-56	0256
3-48	0348

5 Pasco Hill Road • Cromwell, CT 06416-1093
Phone: 860-828-0847 • Call Toll Free: 800-243-6032 • Fax: 860-828-0381
Web Address: http://www.amatom.com • E-Mail: sales@amatom.com

SWAGE TYPE ROUND • HEX STANDOFFS 3/16" - .139 SHANK

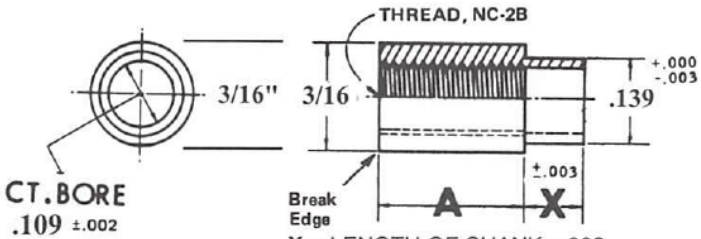

X = LENGTH OF SHANK ±.003
T = THICKNESS OF PANEL
A = LENGTH OF STANDOFF ±.005

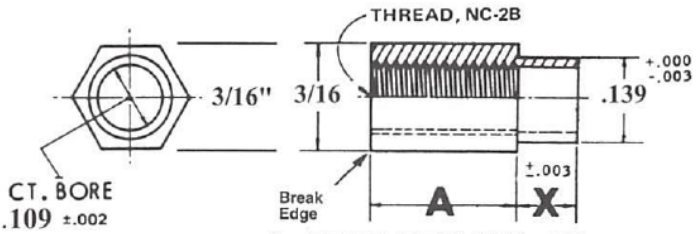

X = LENGTH OF SHANK ±.003
T = THICKNESS OF PANEL
A = LENGTH OF STANDOFF ±.005

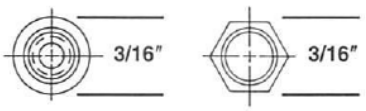

A Length	Part No. Round	Part No. Hex
1/8	9518	9611
3/16	9519	9612
1/4	9520	9613
5/16	9521	9614
3/8	9522	9615
7/16	9523	9616
1/2	9524	9617
9/16	9525	9618
5/8	9526	9619
11/16	9527	9620
3/4	9528	9621
7/8	9529	9622
1	9530	9623

Note: For swage type spacer see code page 21.

Round Swage Tooling		
Punch	Anvil	Body Length
PSP 607	PSA 201-1	1/8-3/16
	201-2	1/4-7/16
	201-3	1/2-11/16
	201-4	3/4-1"

Hex Swage Tooling		
Punch	Anvil	Body Length
PSP 607	PSA 201-1H	1/8-3/16
	201-2H	1/4-7/16
	201-3H	1/2-11/16
	201-4H	3/4-1"

Refer to page 4 for Thread Depth.
Refer to page 7 for installation instructions.
Refer to page 8 for Finish Codes.
For parts not listed contact sales office.

PART NUMBER ORDERING SYSTEM

XXXXX - X - XXXX- XX

PART NO. | MATERIAL | FINISH
SHANK | THREAD

SHANK/BOARD THICKNESS CODE		
X Shank ±.003	T Board Thickness	Code
.075	1/32	A
.105	1/16	B
.135	3/32	C
.165	1/8	D
.230	3/16	E
.290	1/4	F

MATERIAL	CODE
Aluminum	A
Brass	B
Steel	S
Stainless Steel	SS

THREAD CODE	
THREAD	CODE
2-56	0256
3-48	0348

5 Pasco Hill Road • Cromwell, CT 06416-1093
Phone: 860-828-0847 • Call Toll Free: 800-243-6032 • Fax: 860-828-0381
Web Address: http://www.amatom.com • E-Mail: sales@amatom.com

AMATOM®

SWAGE STANDOFFS

SWAGE TYPE ROUND • HEX STANDOFFS 1/4" - .138 SHANK

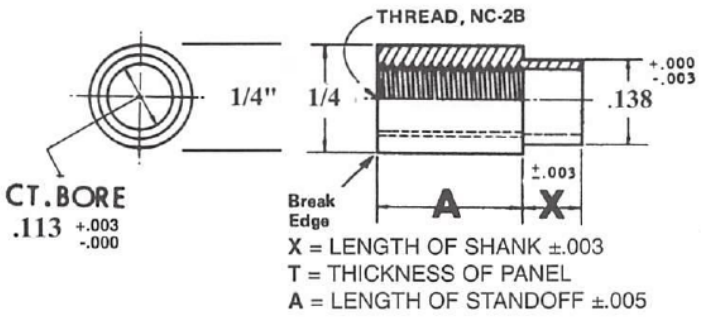

X = LENGTH OF SHANK ±.003
T = THICKNESS OF PANEL
A = LENGTH OF STANDOFF ±.005

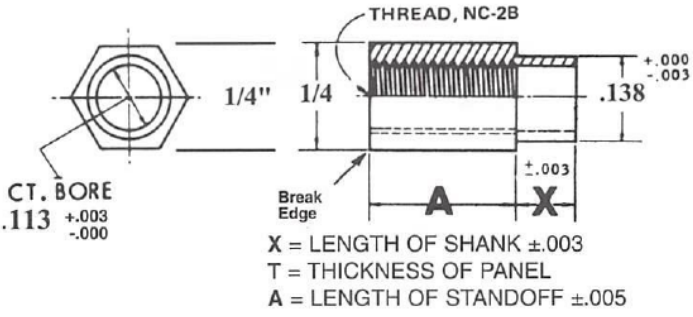

X = LENGTH OF SHANK ±.003
T = THICKNESS OF PANEL
A = LENGTH OF STANDOFF ±.005



A Length	Part No. Round	Part No. Hex
1/8	9705	9714
3/16	9706	9715
1/4	9707	9716
5/16	9708	9717
3/8	9709	9718
1/2	9710	9719
5/8	9711	9720
3/4	9712	9721
1	9713	9722

Note: For swage type spacer see code page 21.

Round Swage Tooling		
Punch	Anvil	Body Length
PSP 607	PSA 110-1	1/8-3/16
	110-2	1/4-7/16
	110-3	1/2-11/16
	110-4	3/4-1"

Hex Swage Tooling		
Punch	Anvil	Body Length
PSP 607	PSA 110-1H	1/8-3/16
	110-2H	1/4-7/16
	110-3H	1/2-11/16
	110-4H	3/4-1"

Refer to page 4 for Thread Depth.
Refer to page 7 for installation instructions.
Refer to page 8 for Finish Codes.
For parts not listed contact sales office.

PART NUMBER ORDERING SYSTEM

XXXX**X** - X - XXXX- XX

PART NO. | SHANK | MATERIAL | THREAD | FINISH

SHANK/BOARD THICKNESS CODE		
X Shank ±.003	T Board Thickness	Code
.075	1/32	A
.105	1/16	B
.135	3/32	C
.165	1/8	D
.230	3/16	E
.290	1/4	F

MATERIAL	CODE
Aluminum	A
Brass	B
Steel	S
Stainless Steel	SS

THREAD CODE	
THREAD	CODE
2-56	0256
4-40*	0440

*We do not recommend this size thread in this part.

5 Pasco Hill Road • Cromwell, CT 06416-1093
Phone: 860-828-0847 • Call Toll Free: 800-243-6032 • Fax: 860-828-0381
Web Address: http://www.amatom.com • E-Mail: sales@amatom.com

SWAGE TYPE ROUND STANDOFFS 1/4" - .188 SHANK

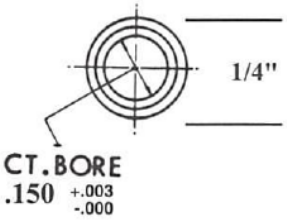

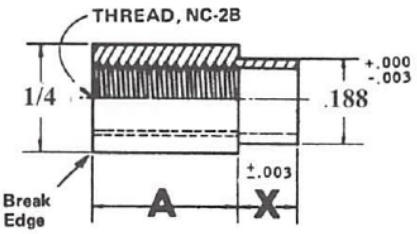

X = LENGTH OF SHANK ±.003
T = THICKNESS OF PANEL
A = LENGTH OF STANDOFF ±.005

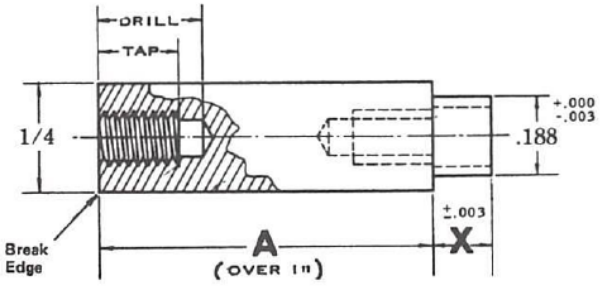

Length under 1"

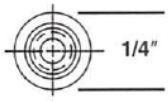

A Length	Part No. Round
1/8	9531
3/16	9532
1/4	9533
5/16	9534
3/8	9535
7/16	9536
1/2	9537
9/16	9538
5/8	9539
11/16	9540
3/4	9541
13/16	9542
7/8	9543
15/16	9544
1	9545

Round Swage Tooling		
Punch	Anvil	Body Length
PSP 612	PSA 110-1	1/8-3/16
	110-2	1/4-7/16
	110-3	1/2-11/16
	110-4	3/4-2"

Refer to page 4 for Thread Depth.
Refer to page 7 for installation instructions.
Refer to page 8 for Finish Codes.
For parts not listed contact sales office.

Length over 1"

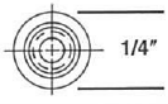

A Length	Part No. Round
1-1/8	9546
1-1/4	9547
1-3/8	9548
1-1/2	9549
1-3/4	9550
2	9551

Note: For swage type spacer see code page 21.

	Drill	Tap
4-40	11/32"	1/4"
6-32	1/2"	3/8"

PART NUMBER ORDERING SYSTEM

XXXXX - X - XXXX- XX

PART NO. | SHANK | MATERIAL | THREAD | FINISH

SHANK/BOARD THICKNESS CODE		
X	T	
Shank ±.003	Board Thickness	Code
.075	1/32	A
.105	1/16	B
.135	3/32	C
.165	1/8	D
.230	3/16	E
.290	1/4	F

MATERIAL	CODE
Aluminum	A
Brass	B
Steel	S
Stainless Steel	SS

THREAD CODE	
THREAD	CODE
4-40	0440
6-32	0632

5 Pasco Hill Road • Cromwell, CT 06416-1093
Phone: 860-828-0847 • Call Toll Free: 800-243-6032 • Fax: 860-828-0381
Web Address: http://www.amatom.com • E-Mail: sales@amatom.com

AMATOM®

SWAGE STANDOFFS

SWAGE TYPE HEXAGON STANDOFFS 1/4" - .188 SHANK

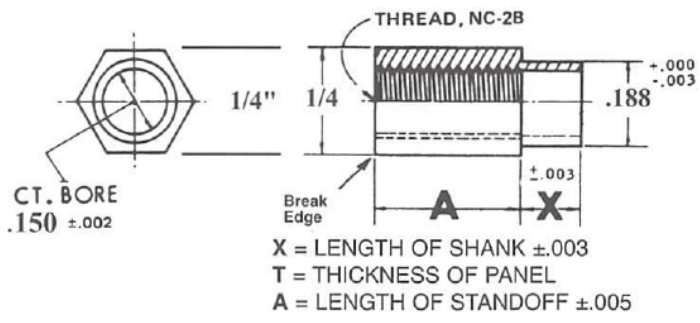

X = LENGTH OF SHANK ±.003
T = THICKNESS OF PANEL
A = LENGTH OF STANDOFF ±.005

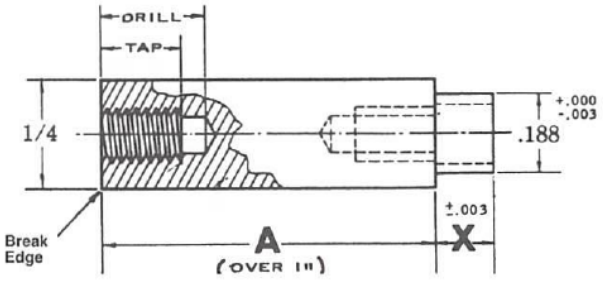

Length under 1"

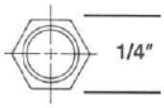

A Length	Part No. Hex
1/8	9624
3/16	9625
1/4	9626
5/16	9627
3/8	9628
7/16	9629
1/2	9630
9/16	9631
5/8	9632
11/16	9633
3/4	9634
13/16	9635
7/8	9636
15/16	9637
1	9638

Hex Swage Tooling		
Punch	Anvil	Body Length
PSP 612	PSA 110-1H	1/8-3/16
	110-2H	1/4-7/16
	110-3H	1/2-11/16
	110-4H	3/4-2"

Refer to page 4 for Thread Depth.
Refer to page 7 for installation instructions.
Refer to page 8 for Finish Codes.
For parts not listed contact sales office.

Length over 1"

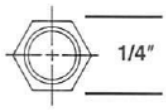

A Length	Part No. Hex
1-1/8	9639
1-1/4	9640
1-3/8	9641
1-1/2	9642
1-3/4	9643
2	9644

Note: For swage type spacer see code page 21.

	Drill	Tap
4-40	11/32"	1/4"
6-32	1/2"	3/8"

Note: Available in smaller thread size than shown. On special order only.

PART NUMBER ORDERING SYSTEM

XXXXX - X - XXXX- XX

PART NO. | MATERIAL | FINISH
SHANK
THREAD

SHANK/BOARD THICKNESS CODE		
X	T	
Shank ±.003	Board Thickness	Code
.075	1/32	A
.105	1/16	B
.135	3/32	C
.165	1/8	D
.230	3/16	E
.290	1/4	F

MATERIAL	CODE
Aluminum	A
Brass	B
Steel	S
Stainless Steel	SS

THREAD CODE	
THREAD	CODE
4-40	0440
6-32	0632

5 Pasco Hill Road • Cromwell, CT 06416-1093
Phone: 860-828-0847 • Call Toll Free: 800-243-6032 • Fax: 860-828-0381
Web Address: http://www.amatom.com • E-Mail: sales@amatom.com

SWAGE TYPE ROUND STANDOFFS 5/16"

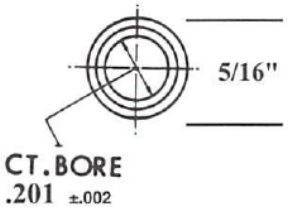

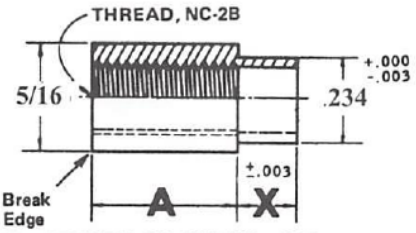

X = LENGTH OF SHANK ±.003
T = THICKNESS OF PANEL
A = LENGTH OF STANDOFF ±.005

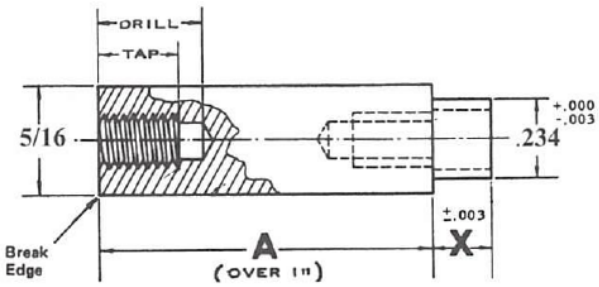

Length under 1"



A Length	Part No. Round
1/8	9552
3/16	9553
1/4	9554
5/16	9555
3/8	9556
7/16	9557
1/2	9558
9/16	9559
5/8	9560
11/16	9561
3/4	9562
13/16	9563
7/8	9564
15/16	9565
1	9566

Round Swage Tooling		
Punch	Anvil	Body Length
PSP 675	PSA 202-1	1/8-3/16
	202-2	1/4-7/16
	202-3	1/2-11/16
	202-4	3/4-2"

Refer to page 4 for Thread Depth.
Refer to page 7 for installation instructions.
Refer to page 8 for Finish Codes.
For parts not listed contact sales office.

Length over 1"



A Length	Part No. Round
1-1/8	9567
1-1/4	9568
1-3/8	9569
1-1/2	9570
1-3/4	9571
2	9572

Note: For swage type spacer see code page 21.

	Drill	Tap
6-32	1/2"	3/8"
8-32	9/16"	7/16"
10-32	5/8"	1/2"

PART NUMBER ORDERING SYSTEM

XXXXX - X - XXXX- XX

PART NO. | MATERIAL | FINISH
SHANK | THREAD

SHANK/BOARD THICKNESS CODE		
X	T	
Shank ±.003	Board Thickness	Code
.075	1/32	A
.105	1/16	B
.135	3/32	C
.165	1/8	D
.230	3/16	E
.290	1/4	F

MATERIAL	CODE
Aluminum	A
Brass	B
Steel	S
Stainless Steel	SS

THREAD CODE	
THREAD	CODE
6-32	0632
8-32	0832

5 Pasco Hill Road • Cromwell, CT 06416-1093
Phone: 860-828-0847 • Call Toll Free: 800-243-6032 • Fax: 860-828-0381
Web Address: http://www.amatom.com • E-Mail: sales@amatom.com

AMATOM®

SWAGE TYPE HEXAGON STANDOFFS 5/16"

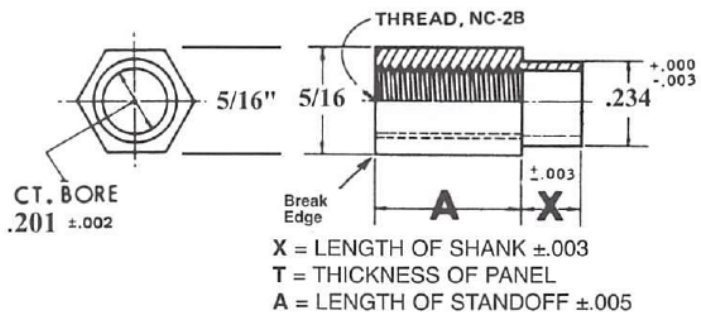

X = LENGTH OF SHANK ±.003
T = THICKNESS OF PANEL
A = LENGTH OF STANDOFF ±.005

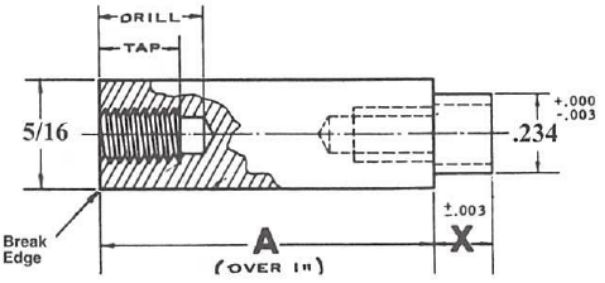

Length under 1"

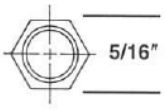

A Length	Part No. Hex
1/8	9645
3/16	9646
1/4	9647
5/16	9648
3/8	9649
7/16	9650
1/2	9651
9/16	9652
5/8	9653
11/16	9654
3/4	9655
13/16	9656
7/8	9657
15/16	9658
1	9659

Hex Swage Tooling		
Punch	Anvil	Body Length
PSP 675	PSA 202-1H	1/8-3/16
	202-2H	1/4-7/16
	202-3H	1/2-11/16
	202-4H	3/4-2"

Refer to page 4 for Thread Depth.
Refer to page 7 for installation instructions.
Refer to page 8 for Finish Codes.
For parts not listed contact sales office.

Length over 1"

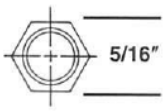

A Length	Part No. Hex
1-1/8	9660
1-1/4	9661
1-3/8	9662
1-1/2	9663
1-3/4	9664
2	9665

Note: For swage type spacer see code page 21.

	Drill	Tap
6-32	1/2"	3/8"
8-32	9/16"	7/16"
10-32	5/8"	1/2"

PART NUMBER ORDERING SYSTEM

XXXXX - X - XXXX- XX

PART NO. | MATERIAL | FINISH
SHANK
THREAD

SHANK/BOARD THICKNESS CODE		
X	T	
Shank ±.003	Board Thickness	Code
.075	1/32	A
.105	1/16	B
.135	3/32	C
.165	1/8	D
.230	3/16	E
.290	1/4	F

MATERIAL	CODE
Aluminum	A
Brass	B
Steel	S
Stainless Steel	SS

THREAD CODE	
THREAD	CODE
6-32	0632
8-32	0832

5 Pasco Hill Road • Cromwell, CT 06416-1093
Phone: 860-828-0847 • Call Toll Free: 800-243-6032 • Fax: 860-828-0381
Web Address: http://www.amatom.com • E-Mail: sales@amatom.com

SWAGE TYPE ROUND STANDOFFS 3/8"

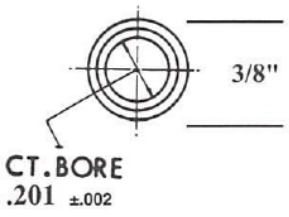

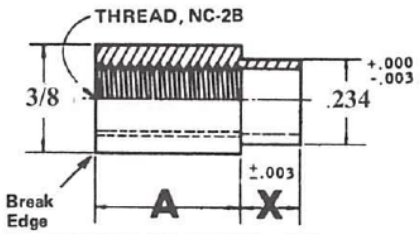

X = LENGTH OF SHANK ±.003
T = THICKNESS OF PANEL
A = LENGTH OF STANDOFF ±.005

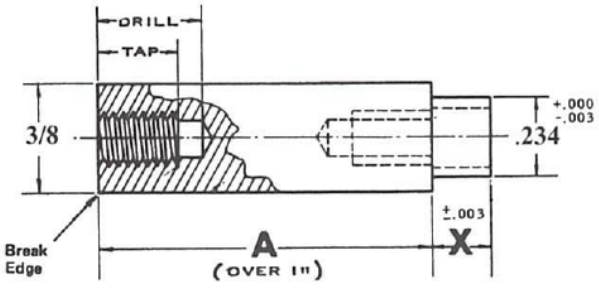

Length under 1"

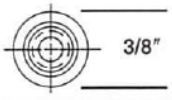

A Length	Part No. Round
1/8	9573
3/16	9574
1/4	9575
5/16	9576
3/8	9577
1/2	9578
9/16	9579
5/8	9580
11/16	9581
3/4	9582
13/16	9583
7/8	9584
15/16	9585
1	9586

Round Swage Tooling		
Punch	Anvil	Body Length
PSP 675	PSA 189-1	1/8-3/16
	189-2	1/4-7/16
	189-3	1/2-11/16
	189-4	3/4-2"

Refer to page 4 for Thread Depth.
Refer to page 7 for installation instructions.
Refer to page 8 for Finish Codes.
For parts not listed contact sales office.

Length over 1"



A Length	Part No. Round
1-1/8	9587
1-1/4	9588
1-3/8	9589
1-1/2	9590
1-3/4	9591
2	9592

Note: For swage type spacer see code page 21.

	Drill	Tap
6-32	1/2"	3/8"
8-32	9/16"	7/16"
10-32	5/8"	1/2"

PART NUMBER ORDERING SYSTEM

XXXXX - X - XXXX- XX

PART NO. | MATERIAL | FINISH
SHANK | THREAD

SHANK/BOARD THICKNESS CODE		
X Shank ±.003	T Board Thickness	Code
.075	1/32	A
.105	1/16	B
.135	3/32	C
.165	1/8	D
.230	3/16	E
.290	1/4	F

MATERIAL	CODE
Aluminum	A
Brass	B
Steel	S
Stainless Steel	SS

THREAD CODE	
THREAD	CODE
6-32	0632
8-32	0832
10-32	1032

5 Pasco Hill Road • Cromwell, CT 06416-1093
Phone: 860-828-0847 • Call Toll Free: 800-243-6032 • Fax: 860-828-0381
Web Address: http://www.amatom.com • E-Mail: sales@amatom.com

AMATOM®

SWAGE STANDOFFS

SWAGE TYPE HEXAGON STANDOFFS 3/8"

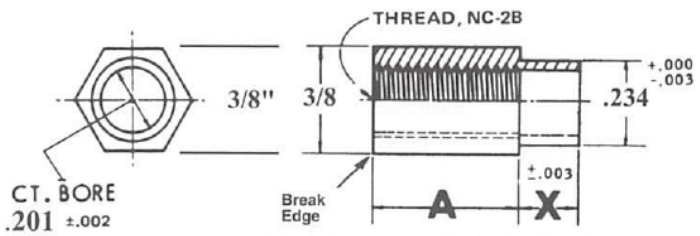

X = LENGTH OF SHANK ±.003
T = THICKNESS OF PANEL
A = LENGTH OF STANDOFF ±.005

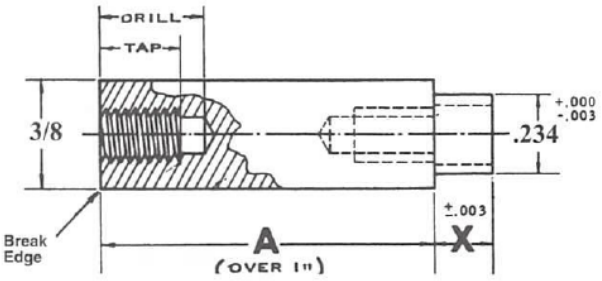

Length under 1"

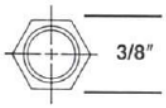

A Length	Part No. Hex
1/8	9666
3/16	9667
1/4	9668
5/16	9669
3/8	9670
7/16	9671
1/2	9672
9/16	9673
5/8	9674
11/16	9675
3/4	9676
13/16	9677
7/8	9678
15/16	9679
1	9680

Hex Swage Tooling		
Punch	Anvil	Body Length
PSP 675	PSA 189H-1	1/8-3/16
	189H-2	1/4-7/16
	189H-3	1/2-11/16
	189H-4	3/4-2"

Refer to page 4 for Thread Depth.
Refer to page 7 for installation instructions.
Refer to page 8 for Finish Codes.
For parts not listed contact sales office.

Length over 1"

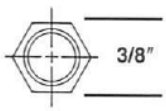

A Length	Part No. Hex
1-1/8	9681
1-1/4	9682
1-3/8	9683
1-1/2	9684
1-3/4	9685
2	9686

Note: For swage type spacer see code page 21.

	Drill	Tap
6-32	1/2"	3/8"
8-32	9/16"	7/16"
10-32	5/8"	1/2"

PART NUMBER ORDERING SYSTEM

XXXXX - X - XXXX- XX

PART NO. | SHANK | MATERIAL | THREAD | FINISH

SHANK/BOARD THICKNESS CODE		
X	T	
Shank ±.003	Board Thickness	Code
.075	1/32	A
.105	1/16	B
.135	3/32	C
.165	1/8	D
.230	3/16	E
.290	1/4	F

MATERIAL	CODE
Aluminum	A
Brass	B
Steel	S
Stainless Steel	SS

THREAD CODE	
THREAD	CODE
6-32	0632
8-32	0832
10-32	1032

5 Pasco Hill Road • Cromwell, CT 06416-1093
Phone: 860-828-0847 • Call Toll Free: 800-243-6032 • Fax: 860-828-0381
Web Address: http://www.amatom.com • E-Mail: sales@amatom.com

3/16" ROUND • HEX STANDOFFS MALE-FEMALE

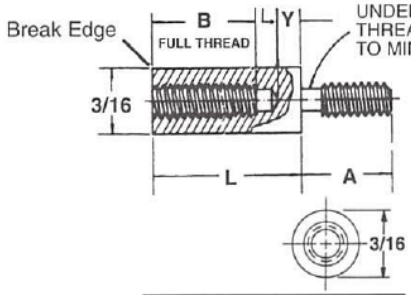

Length	Part No. Round
3/16	9780
1/4	9781
5/16	9782
3/8	9783
7/16	9784
1/2	9785
9/16	9786
5/8	9787
11/16	9788
3/4	9789
13/16	9790
7/8	9791
15/16	9792
1	9793

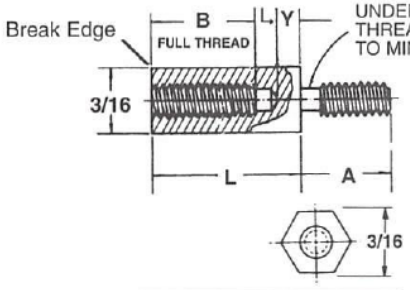

Length	Part No. Hex
3/16	9723
1/4	9724
5/16	9725
3/8	9726
7/16	9727
1/2	9728
9/16	9729
5/8	9730
11/16	9731
3/4	9732
13/16	9733
7/8	9734
15/16	9735
1	9736

Refer to page 8 for Finish Codes.

For parts not listed contact sales office.

Available in other materials, threads, and lengths.

PART NUMBER ORDERING SYSTEM

XXXX - X - XXXX - XX

PART NO. | THREAD | MATERIAL | FINISH

IF MALE AND FEMALE THREADS ARE DIFFERENT

XXXX - X - XXXX - XXXX- XX

PART NO. | MALE THD. | FEMALE THD. | MATERIAL | FINISH

CHART A			
THREAD	A	B	Y
2-56	5/32	3/16	.032
4-40	3/16	1/4	.032
6-32	1/4	3/8	.039

CHART B					APPROX NO. OF THDS MIN.
DIM "L"	ROUND P/N	HEX P/N	THREAD	"B" MIN	
3/16	9780	9723	2-56	.077	4.25
			4-40	.070	2.50
1/4	9781	9724	2-56	.140	7.50
			4-40	.133	5.25
5/16	9782	9725	4-40	.195	7.75

Y=.032 MIN
Reference Chart B for shorter length.

THREAD CODE	
THREAD	CODE
2-56	0256
4-40	0440
6-32	0632

NOTE: 2-56 thread size in nylon not available as standard. Special order only.

MATERIAL	CODE
Aluminum	A
Brass	B
Steel	S
Stainless Steel	SS
Nylon (available in 4-40 only)	N

5 Pasco Hill Road • Cromwell, CT 06416-1093
Phone: 860-828-0847 • Call Toll Free: 800-243-6032 • Fax: 860-828-0381
Web Address: http://www.amatom.com • E-Mail: sales@amatom.com

AMATOM®

1/4" ROUND • HEX STANDOFFS MALE-FEMALE

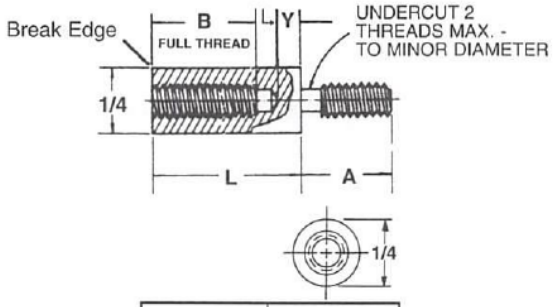

Length	Part No. Round
1/4	9794
3/8	9795
1/2	9796
5/8	9797
3/4	9798
7/8	9799
1	9800
1-1/8	9801
1-1/4	9802
1-3/8	9803
1-1/2	9804
1-5/8	9805
1-3/4	9806
1-7/8	9807
2	9808

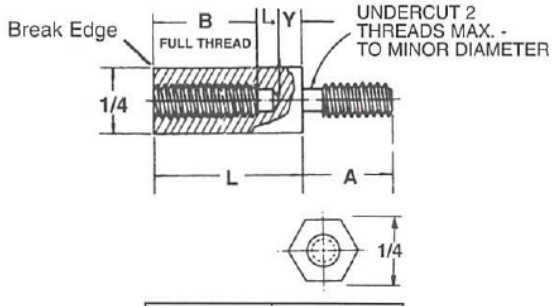

Length	Part No. Hex
1/4	9737
3/8	9738
1/2	9739
5/8	9740
3/4	9741
7/8	9742
1	9743
1-1/8	9744
1-1/4	9745
1-3/8	9746
1-1/2	9747
1-5/8	9748
1-3/4	9749
1-7/8	9750
2	9751

Refer to page 8 for Finish Codes.

For parts not listed contact sales office.

Available in other materials, threads, and lengths.

PART NUMBER ORDERING SYSTEM

XXXX - X - XXXX - XX

PART NO. | THREAD | MATERIAL | FINISH

IF MALE AND FEMALE THREADS ARE DIFFERENT

XXXX - X - XXXX - XXXX- XX

PART NO. | MALE THD. | FEMALE THD. | MATERIAL | FINISH

CHART A			
THREAD	A	B	Y
2-56	5/32	3/16	.032
4-40	3/16	1/4	.032
6-32	1/4	3/8	.039
8-32	3/8	7/16	.053

Y=.032 MIN
Reference Chart B for shorter length.

CHART B					APPROX NO. OF THDS MIN.
DIM "L"	ROUND P/N	HEX P/N	THREAD	"B" MIN	
5/16	9794		4-40	.133	5.25
			6-32	.104	3.25
			8-32	.090	2.75
1/4		9737	4-40	.133	5.25
			6-32	.104	3.25
			8-32	.090	2.75
3/8	9795	9738	6-32	.229	7.00
			8-32	.215	6.50
1/2	9796	9739	6-32	.346	11.00
			8-32	.340	10.50

THREAD CODE	
THREAD	CODE
2-56	0256
4-40	0440
6-32	0632
8-32	0832

NOTE: 2-56 thread size in nylon not available as standard. Special order only.

MATERIAL	CODE
Aluminum	A
Brass	B
Steel	S
Stainless Steel	SS
Nylon	N

5 Pasco Hill Road • Cromwell, CT 06416-1093
Phone: 860-828-0847 • Call Toll Free: 800-243-6032 • Fax: 860-828-0381
Web Address: http://www.amatom.com • E-Mail: sales@amatom.com

AMATOM®

3/8" ROUND STANDOFFS MALE-FEMALE

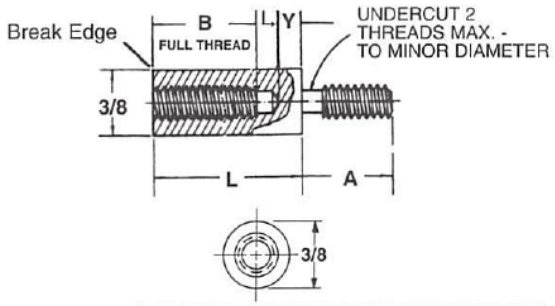

Length	Part No.	Length	Part No.
1/4	9809	2	9823
3/8	9810	2-1/4	9824
1/2	9811	2-1/2	9825
5/8	9812	2-3/4	9826
3/4	9813	3	9827
7/8	9814	3-1/4	9828
1	9815	3-1/2	9829
1-1/8	9816	3-3/4	9830
1-1/4	9817	4	9831
1-3/8	9818	4-1/4	9832
1-1/2	9819	4-1/2	9833
1-5/8	9820	4-3/4	9834
1-3/4	9821	5	9835
1-7/8	9822	6	9836

Refer to page 8 for Finish Codes.

For parts not listed contact sales office.

Available in other materials, threads, and lengths.

CHART A			
THREAD	A	B	Y
4-40	3/16	1/4	.032
6-32	1/4	3/8	.039
8-32	3/8	7/16	.053
10-32	3/8	1/2	.065

Y=.032 MIN
Reference Chart B for shorter length.

CHART B				APPROX NO. OF THDS MIN.
DIM "L"	ROUND P/N	THREAD	"B" MIN	
1/4	9809	4-40	.133	5.25
		6-32	.104	3.25
		8-32	.090	2.75
		10-32	.078	2.25
3/8	9810	6-32	.229	7.00
		8-32	.215	6.50
		10-32	.203	6.25
1/2	9811	6-32	.346	11.00
		8-32	.340	10.50
		10-32	.328	10.25
5/8	9812	10-32	.453	14.00

PART NUMBER ORDERING SYSTEM

XXXX - X - XXXX - XX

PART NO. | THREAD | MATERIAL | FINISH

IF MALE AND FEMALE THREADS ARE DIFFERENT

XXXX - X - XXXX - XXXX- XX

PART NO. | MALE THD. | FEMALE THD. | MATERIAL | FINISH

THREAD CODE	
THREAD	CODE
4-40	0440
6-32	0632
8-32	0832
10-32	1032

NOTE: 2-56 thread size in nylon not available as standard. Special order only.

MATERIAL	CODE
Aluminum	A
Brass	B
Steel	S
Stainless Steel	SS
Nylon	N

5 Pasco Hill Road • Cromwell, CT 06416-1093
Phone: 860-828-0847 • Call Toll Free: 800-243-6032 • Fax: 860-828-0381
Web Address: http://www.amatom.com • E-Mail: sales@amatom.com

AMATOM®

3/8" HEXAGON STANDOFFS MALE-FEMALE

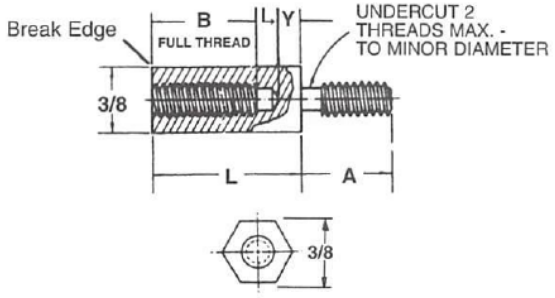

Length	Part No.	Length	Part No.
1/4	9752	2	9766
3/8	9753	2-1/4	9767
1/2	9754	2-1/2	9768
5/8	9755	2-3/4	9769
3/4	9756	3	9770
7/8	9757	3-1/4	9771
1	9758	3-1/2	9772
1-1/8	9759	3-3/4	9773
1-1/4	9760	4	9774
1-3/8	9761	4-1/4	9775
1-1/2	9762	4-1/2	9776
1-5/8	9763	4-3/4	9777
1-3/4	9764	5	9778
1-7/8	9765	6	9779

Refer to page 8 for Finish Codes.

For parts not listed contact sales office.

Available in other materials, threads, and lengths.

CHART A			
THREAD	A	B	Y
4-40	3/16	1/4	.032
6-32	1/4	3/8	.039
8-32	3/8	7/16	.053
10-32	3/8	1/2	.065

Y=.032 MIN
Reference Chart B for shorter length.

CHART B				APPROX NO. OF THDS MIN.
DIM "L"	HEX P/N	THREAD	"B" MIN	
1/4	9752	4-40	.133	5.25
		6-32	.104	3.25
		8-32	.090	2.75
		10-32	.078	2.25
3/8	9753	6-32	.229	7.00
		8-32	.215	6.50
		10-32	.203	6.25
1/2	9754	6-32	.346	11.00
		8-32	.340	10.50
		10-32	.328	10.25
5/8	9755	10-32	.453	14.00

PART NUMBER ORDERING SYSTEM

XXXX - X - XXXX - XX

PART NO. | THREAD | MATERIAL | FINISH

IF MALE AND FEMALE THREADS ARE DIFFERENT

XXXX - X - XXXX - XXXX- XX

PART NO. | MALE THD. | FEMALE THD. | MATERIAL | FINISH

THREAD CODE	
THREAD	CODE
4-40	0440
6-32	0632
8-32	0832
10-32	1032

NOTE: 2-56 thread size in nylon not available as standard. Special order only.

MATERIAL	CODE
Aluminum	A
Brass	B
Steel	S
Stainless Steel	SS
Nylon	N

5 Pasco Hill Road • Cromwell, CT 06416-1093
Phone: 860-828-0847 • Call Toll Free: 800-243-6032 • Fax: 860-828-0381
Web Address: http://www.amatom.com • E-Mail: sales@amatom.com

3/16" HEXAGON JACK SCREWS

AMATOM PART NO.	A LENGTH
9723-S-0440-37 MOD A 1/4	.250
9837-S-0440-37	.312
9838-S-0440-37	.375
9839-S-0440-37	.437
9840-S-0440-37	.500
9841-S-0440-37	.562
9842-S-0440-37	.625
9843-S-0440-37	.687
9844-S-0440-37	.750
9845-S-0440-37	.812
9846-S-0440-37	.875
9847-S-0440-37	.937
9848-S-0440-37	1.000

Finish - 37
Zinc plate .0002 thick per ASTM B-633 Type 11 Class 3 (color chromate)

Steel Material
12L14
Supplied Unassembled

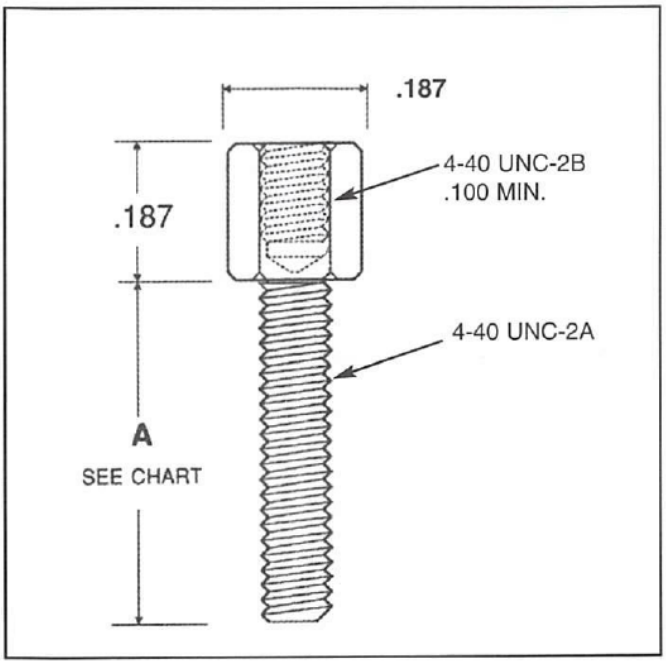

NOTE: AMATOM can quote this part in other materials as a special order item.

RELATED HARDWARE (sold separately)

P/N 4431 FLAT WASHER #4
P/N 4432 LOCK WASHER #4
P/N 4433 HEX NUT #4

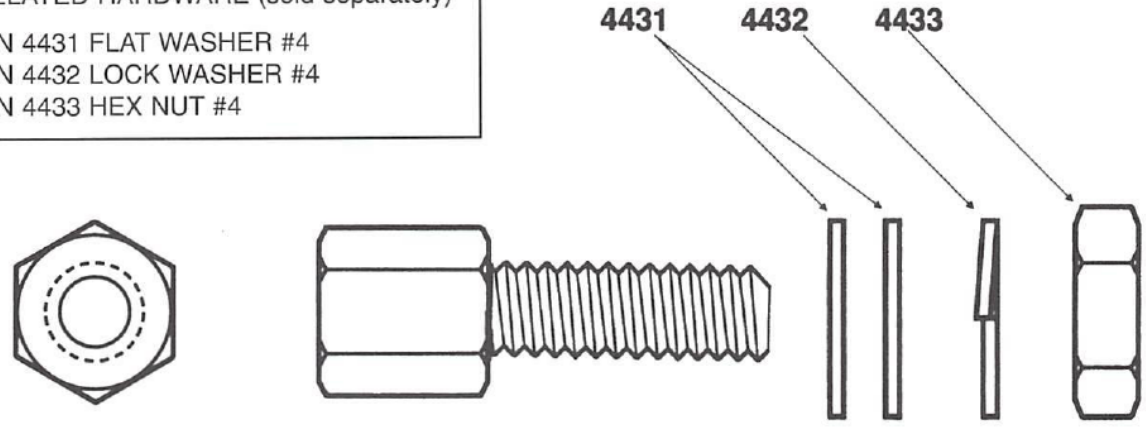

5 Pasco Hill Road • Cromwell, CT 06416-1093
Phone: 860-828-0847 • Call Toll Free: 800-243-6032 • Fax: 860-828-0381
Web Address: http://www.amatom.com • E-Mail: sales@amatom.com

AMATOM®

HINGED STANDOFFS FEMALE - FEMALE 3/16" & 1/4"

CHART A STANDARD INTERNAL THREAD	
THREAD	DEPTH
2-56	3/16
4-40	1/4
6-32	3/8
8-32	7/16
10-32	1/2

CHART B INTERNAL THREAD		
PART NO.	THREAD	DEPTH MIN
17300	4-40	.152
17301	4-40	.214
17315	4-40	.121
17315	6-32	.099
17315	8-32	.090
17316	4-40	.183
17316	6-32,8-32	.152
17317	6-32,8-32	.215
17318	6-32,8-32	.280
17319	6-32,8-32	.340

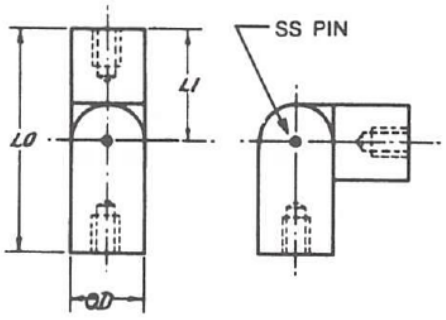

Tolerance on LO ± 1/64

Typical Applications:
Allow circuit boards to fold up providing access for testing and servicing without disconnecting wires or components.

Special Sizes and Finishes Available.

3/16 O.D. Female - Female		
LO	Part No.	Chart Reference Depth of Female Thread (Dim. B)
3/4	**17300**	Chart A 2-56; Chart B 4-40
7/8	**17301**	Chart A
1"	**17302**	Chart A
1-1/8	**17303**	Chart A
1-1/4	**17304**	Chart A
1-3/8	**17305**	Chart A
1-1/2	**17306**	Chart A
1-5/8	**17307**	Chart A
1-3/4	**17308**	Chart A
1-7/8	**17309**	Chart A
2"	**17310**	Chart A

1/4 O.D. Female - Female		
LO	Part No.	Chart Reference Depth of Female Thread (Dim. B)
3/4	**17315**	Chart B
7/8	**17316**	Chart B
1"	**17317**	Chart A 4-40; Chart B All Others
1-1/8	**17318**	Chart A 4-40; Chart B All Others
1-1/4	**17319**	Chart A 4-40; Chart B All Others
1-3/8	**17320**	Chart A
1-1/2	**17321**	Chart A
1-5/8	**17322**	Chart A
1-3/4	**17323**	Chart A
1-7/8	**17324**	Chart A
2"	**17325**	Chart A

Stock Materials And Finishes:
- Brass-Zinc Plate (-28 code)
- Aluminum-Plain (-0 code)
- Stainless Steel-Passivated (-7 code)

Refer To Page 8 For Other Finish Codes.

PART NUMBER ORDERING SYSTEM

XXXXX - X - XXXX - XX

PART NO. | MATERIAL | THREAD | FINISH

THREAD CODE	
THREAD	CODE
2-56	**0256**
4-40	**0440**
6-32	**0632**
8-32	**0832**

3/16" OD 2-56, 4-40
1/4" OD 4-40, 6-32, 8-32

MATERIAL	CODE
Aluminum	**A**
Brass	**B**
Steel	**S**
Stainless Steel	**SS**

5 Pasco Hill Road • Cromwell, CT 06416-1093
Phone: 860-828-0847 • Call Toll Free: 800-243-6032 • Fax: 860-828-0381
Web Address: http://www.amatom.com • E-Mail: sales@amatom.com

HINGED STANDOFFS FEMALE - FEMALE 5/16" & 3/8"

CHART A STANDARD INTERNAL THREAD	
THREAD	DEPTH
2-56	3/16
4-40	1/4
6-32	3/8
8-32	7/16
10-32	1/2

Typical Applications:
Allow circuit boards to fold up providing access for testing and servicing without disconnecting wires or components.

Special Sizes and Finishes Available.

CHART B INTERNAL THREAD		
PART NO.	THREAD	DEPTH MIN
17330	6,8,10-32	.122
17331	6,8,10-32	.117
17332	6,8,10-32	.178
17333	6,8,10-32	.242
17334	6,8,10-32	.302
17335	8,10-32	.367
17336	10-32	.432
17346	6,8,10-32	.084
17347	6,8,10-32	.149
17348	6,8,10-32	.209
17349	6,8,10-32	.274
17350	8,10-32	.334
17351	8,10-32	.399
17352	10-32	.459

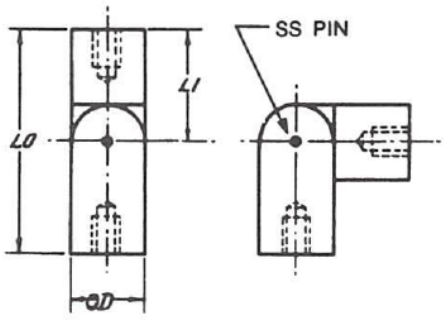

Tolerance on LO ± 1/64

5/16 O.D. Female - Female		
LO	Part No.	Chart Reference Depth of Female Thread (Dim. B)
3/4	**17330**	Chart B
7/8	**17331**	Chart B
1"	**17332**	Chart B
1-1/8	**17333**	Chart B
1-1/4	**17334**	Chart B
1-3/8	**17335**	Chart B
1-1/2	**17336**	Chart B
1-5/8	**17337**	Chart A
1-3/4	**17338**	Chart A
1-7/8	**17339**	Chart A
2"	**17340**	Chart A

3/8 O.D. Female - Female		
LO	Part No.	Chart Reference Depth of Female Thread (Dim. B)
3/4	**17345**	Chart B
7/8	**17346**	Chart B
1"	**17347**	Chart B
1-1/8	**17348**	Chart B
1-1/4	**17349**	Chart B
1-3/8	**17350**	Chart B
1-1/2	**17351**	Chart B
1-5/8	**17352**	Chart A
1-3/4	**17353**	Chart A
1-7/8	**17354**	Chart A
2"	**17355**	Chart A

Stock Materials And Finishes:
- Brass-Zinc Plate (-28 code)
- Aluminum-Plain (-0 code)
- Stainless Steel-Passivated (-7 code)

Refer To Page 8 For Other Finish Codes.

PART NUMBER ORDERING SYSTEM

XXXXX - X - XXXX - XX

PART NO. | MATERIAL | THREAD | FINISH

THREAD CODE	
THREAD	CODE
6-32	**0632**
8-32	**0832**
10-32	**1032**

5/16" OD 6-32, 8-32, 10-32
3/8" OD 6-32, 8-32, 10-32

MATERIAL	CODE
Aluminum	**A**
Brass	**B**
Steel	**S**
Stainless Steel	**SS**

5 Pasco Hill Road • Cromwell, CT 06416-1093
Phone: 860-828-0847 • Call Toll Free: 800-243-6032 • Fax: 860-828-0381
Web Address: http://www.amatom.com • E-Mail: sales@amatom.com

AMATOM®

HINGED STANDOFFS MALE - MALE
3/16", 1/4", 5/16" & 3/8"

EXTERNAL THREAD	
THREAD	DEPTH
2-56	5/32
4-40	3/16
6-32	1/4
8-32	3/8
10-32	3/8

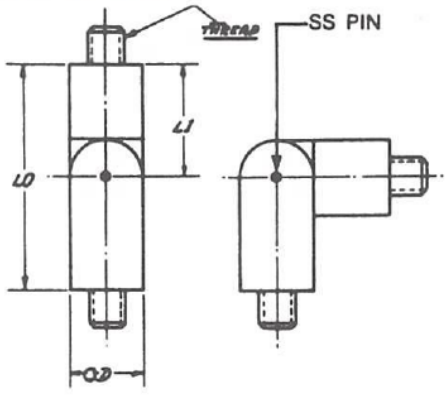

Typical Applications:
Allow circuit boards to fold up providing access for testing and servicing without disconnecting wires or components.

Special Sizes and Finishes Available.

TOLERANCE ON LD ±1/64

MALE - MALE				
LO	Part No.			
	3/16 OD	1/4 OD	5/16 OD	3/8 OD
1/2	17360	17375	17390	17405
5/8	17361	17376	17391	17406
3/4	17362	17377	17392	17407
7/8	17363	17378	17393	17408
1"	17364	17379	17394	17409
1-1/8	17365	17380	17395	17410
1-1/4	17366	17381	17396	17411
1-3/8	17367	17382	17397	17412
1-1/2	17368	17383	17398	17413
1-5/8	17369	17384	17399	17414
1-3/4	17370	17385	17400	17415
1-7/8	17371	17386	17401	17416
2"	17372	17387	17402	17417

PART NUMBER ORDERING SYSTEM

XXXXX - X - XXXX - XX

PART NO. | THREAD | MATERIAL | FINISH

THREAD CODE	
THREAD	CODE
2-56	0256
4-40	0440
6-32	0632
8-32	0832
10-32	1032

3/16 Thread: 2-56, 4-40
1/4 Thread: 4-40, 6-32, 8-32
5/16 Thread: 6-32, 8-32, 10-32
3/8 Thread: 6-32, 8-32, 10-32

Stock Materials And Finishes:
- Brass-Zinc Plate (-28 code)
- Aluminum-Plain (-0 code)
- Stainless Steel-Passivated (-7 code)

Refer To Page 8 For Other Finish Codes.

MATERIAL	CODE
Aluminum	A
Brass	B
Steel	S
Stainless Steel	SS

5 Pasco Hill Road • Cromwell, CT 06416-1093
Phone: 860-828-0847 • Call Toll Free: 800-243-6032 • Fax: 860-828-0381
Web Address: http://www.amatom.com • E-Mail: sales@amatom.com

HINGED STANDOFFS

The Following Have Been Made On Special Order When One Leg Is Longer Than The Other.

SPECIFY ALL DIMENSIONS REQUIRED

DIAMETER — O.D.
LENGTH OVERALL — L.O. ±1/64
LENGTH TO PIVOT — L1

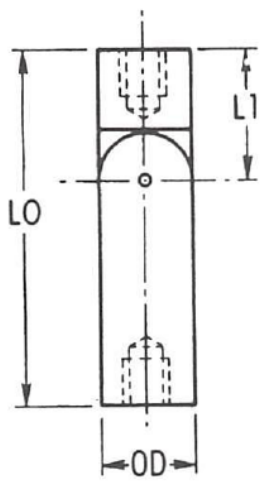

FEMALE - FEMALE
TYPE 1

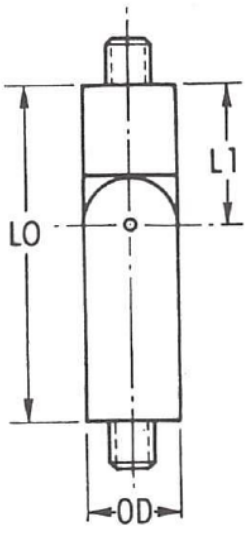

MALE - MALE
TYPE 2

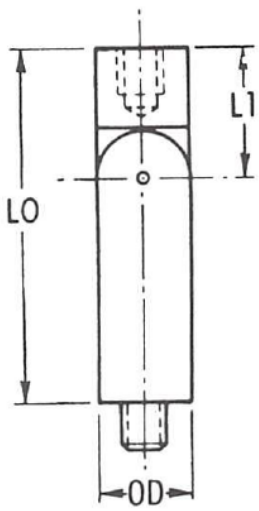

FEMALE - MALE
TYPE 3

- Send Print For Special Size Quotes.
- Any Finish From Page 8 Is Available.
- Contact Sales Office For Any Questions.

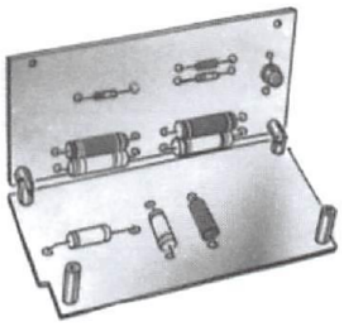

5 Pasco Hill Road • Cromwell, CT 06416-1093
Phone: 860-828-0847 • Call Toll Free: 800-243-6032 • Fax: 860-828-0381
Web Address: http://www.amatom.com • E-Mail: sales@amatom.com

AMATOM®

ANTI-ROTATION STANDOFFS

ANTI-ROTATION ROUND STANDOFFS 7/32", 9/32", 11/32" & 3/8"

Length ±.005	Part No. 7/32	9/32	11/32	3/8
1/8	18091	18121	18151	18181
3/16	18092	18122	18152	18182
1/4	18093	18123	18153	18183
5/16	18094	18124	18154	18184
3/8	18095	18125	18155	18185
7/16	18096	18126	18156	18186
1/2	18097	18127	18157	18187
9/16	18098	18128	18158	18188
5/8	18099	18129	18159	18189
11/16	18100	18130	18160	18190
3/4	18101	18131	18161	18191
7/8	18103	18133	18163	18193
1	18105	18135	18165	18195

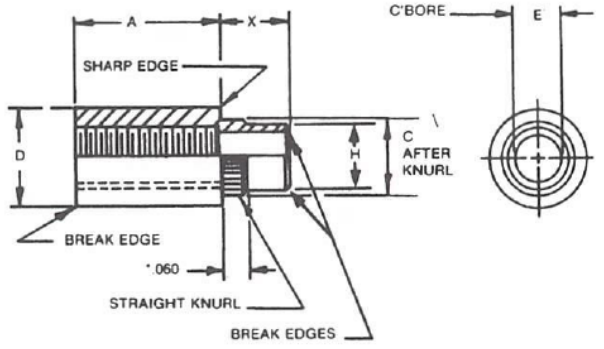

*NOTE: The length of knurl on all standoffs with the "X" dimension (length of shank) of .075 is .030 ±.005.

Dimensions and Tolerances						
Outside Diameter		7/32	9/32	11/32	3/8	3/8
Thread Size		4-40	6-32	8-32	10-24	10-32
Ref.						
E	±.002	.129	.176	.213	.235	.235
C	+.004 -.002	.179	.226	.263	.285	.285
D	±.006	.219	.281	.344	.375	.375
H	+.000 -.004	.166	.213	.250	.272	.272

Swage Tooling					
Body Length		1/8-3/16	1/4-7/16	1/2-11/16	3/4-1"
Size	Punch	ANVIL	ANVIL	ANVIL	ANVIL
7/32	062-4	201-1H	201-2H	201-3H	201-4H
9/32	062-6	110-1H	110-2H	110-3H	110-4H
11/32	062-8	203-1	203-2	203-3	203-4
3/8	062-10	189-1	189-2	189-3	189-4

MATERIAL	CODE
Aluminum	A
Brass	B
Steel	S
Stainless Steel	SS

PART NUMBER ORDERING SYSTEM

XXXXXX - X - XXXX - XX

PART NO. | MAT'L | FINISH

SHANK | THREAD

Refer to page 8 for Finish Codes.
For parts not listed contact sales office.

SHANK/BOARD THICKNESS CODE		
X Shank ±.005	T Board Thick.	Code
.075	1/32	A
.105	1/16	B
.135	3/32	C
.165	1/8	D

THREAD CODE		
SIZE	THREAD	CODE
7/32	4-40	0440
9/32	6-32	0632
11/32	8-32	0832
3/8	10-24	1024
3/8	10-32	1032

5 Pasco Hill Road • Cromwell, CT 06416-1093
Phone: 860-828-0847 • Call Toll Free: 800-243-6032 • Fax: 860-828-0381
Web Address: http://www.amatom.com • E-Mail: sales@amatom.com

AMATOM®

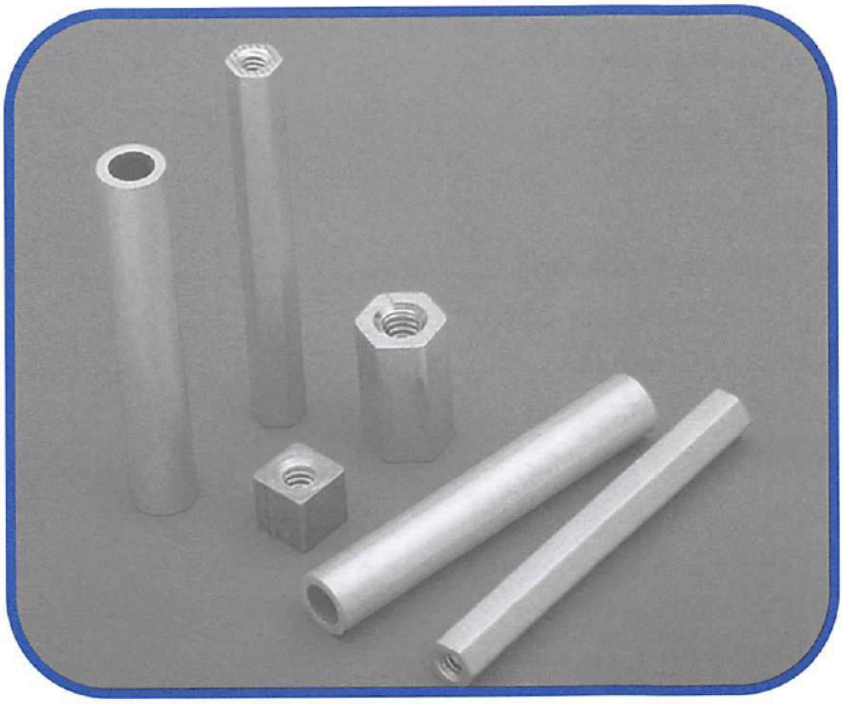

METRIC HARDWARE STANDOFFS AND SPACERS

ELECTRONIC HARDWARE
REFERENCE MANUAL

From anywhere in the USA Call Cromwell, CT **1-800-243-6032**

AMATOM ELECTRONIC HARDWARE
5 Pasco Hill Road
Cromwell, CT 06416-1093
860-828-0847
Fax: 860-828-0381
E-Mail: sales@amatom.com
Web Address: http://www.amatom.com

METRIC STANDOFFS and SPACERS

AMATOM®

Metric Index

This Reference Manual has been compiled to make available to Engineers and Buyers in the Electronic Industry a Full Metric Manual on Post Type Standoffs, Spacers, Swage Standoffs, Male-Female Standoffs and Anti-Rotation Swage Standoffs.

The following is a list of sizes and materials covered.

A. Post Type Standoffs

4.5mm Round and Hex from 3mm to 51mm long **45**
6mm and 6.35mm Round and Hex from 3mm to 51mm long **46**
8mm Round and Hex from 3mm to 51mm long **47**
10mm Round and Hex from 3mm to 51mm long **48**
13mm Round and Hex from 3mm to 51mm long **49**

B. Spacers

4.5mm Round from 3mm to 51mm long **50**
6mm Round from 3mm to 51mm long **50**
8mm Round from 3mm to 51mm long **50**
10mm Round from 3mm to 51mm long **50**
13mm Round from 3mm to 51mm long **50**

C. Swage Type Standoffs

4.5mm Round from 3mm to 51mm long **51**
6mm Round from 3mm to 51mm long **52**
8mm Round from 3mm to 51mm long **53**

D. Male/Female Standoffs

4.5mm Hex from 5mm to 25mm long **54**
6mm Hex from 5mm to 51mm long **55**
10mm Hex from 5mm to 51mm long **56**

E. Anti-Rotation Standoffs

6mm Round from 3mm to 25mm long **57**
8mm Round from 3mm to 25mm long **58**
8mm Round from 3mm to 25mm long **59**
10mm Round from 3mm to 25mm long **60**

Swage Standoffs are available with clearance hole and no threads. Ask our Sales Department for information. Specifications pages 43 and 44.

5 Pasco Hill Road • Cromwell, CT 06416-1093
Phone: 860-828-0847 • Call Toll Free: 800-243-6032 • Fax: 860-828-0381
Web Address: http://www.amatom.com • E-Mail: sales@amatom.com

CLEARANCE HOLES FOR METRIC THREADED FASTENERS

NOMINAL FASTENER SIZE	NORMAL CLEARANCE	NOMINAL FASTENER SIZE	NORMAL CLEARANCE
1.6	1.9	6.0	6.7
2.0	2.4	6.3	7.1
2.5	2.9	8.0	9.0
3.0	3.4	10.0	11.0
3.5	4.0	12.0	13.0
4.0	4.5	14.0	15.0
5.0	5.6	16.0	17.5

METRIC THREAD SIZES

Recommended by ANSI-OMFS and IFI

DIAMETER x PITCH	DIAMETER x PITCH
M1.6 x 0.35	M5.0 x 0.8
M2.0 x 0.4	*M6.3 x 1.0
M2.5 x 0.45	M8.0 x 1.25
M3.0 x 0.5	M10.0 x 1.5
M3.5 x 0.6	M12.0 x 1.75
M4.0 x 0.7	M14.0 x 2.0

*Not included in ISO Series. (The nearest ISO Standard is M6 x 1.0)

CLEARANCE HOLE CODE

DIAMETER x PITCH	CLEARANCE HOLE RANGE	CLEARANCE HOLE CODE
M1.6 x 0.35	1.8 - 2.1	**0019**
M2.0 x 0.4	2.2 - 2.6	**0024**
M2.5 x 0.45	2.7 - 3.1	**0029**
M3.0 x 0.5	3.2 - 3.6	**0034**
M3.5 x 0.6	3.5 - 4.2	**0040**
M4.0 x 0.7	4.2 - 4.8	**0045**
M5.0 x 0.8	5.3 - 6.0	**0056**
M6.0 x 1.0	6.3 - 7.0	**0065**
M6.3 x 1.0	6.7 - 7.5	**0071**
M8.0 x 1.25	8.5 - 9.5	**0090**

LENGTH OF THREAD

BRASS, ALUMINUM & STEEL PARTS

M2.5 thread is tapped thru 15.9MM in length
M3 and larger thread is tapped thru 25.4MM in length

STAINLESS STEEL & NYLON PARTS

M2.5 thread is tapped thru 9.6MM in length
M3 thread is tapped thru 12.7 MM in length
M3.5 and larger thread is tapped thru 25.4MM in length

For lengths longer than specified above – see chart below.

THREAD PART NO. CODE CHART

DIAMETER x PITCH	AMATOM THREAD CODE	DIAMETER X PITCH	AMATOM THREAD CODE
M1.6 x 0.35	1635	M5.0 x 0.8	**0580**
M2.0 x 0.4	0240	M6.0 x 1.0	**0610**
M2.5 x 0.45	2545	*M6.3 x 1.0	**6310**
M3.0 x 0.5	0350	M8.0 x 1.25	**8125**
M3.5 x 0.6	3560	M10.0 x 1.5	**1015**
M4.0 x 0.7	0470	M12.0 x 1.75	**1217**

*Special Order Only

DEPTH OF THREAD CHART

Recommended Blind Hole Thread Engagement

(Drilled and Tapped Both Ends)

THREAD SIZE	SCREW ENGAGEMENT
M2.5	4.8MM
M3.0	6.4MM
M3.5	9.5MM
M4.0	11.1MM
M5.0	12.7MM
M6.0	*14.3MM
M8.0	*14.3MM

*Depending on overall length of body.

Amatom metric threads are in conformance with ISO standards.

5 Pasco Hill Road • Cromwell, CT 06416-1093
Phone: 860-828-0847 • Call Toll Free: 800-243-6032 • Fax: 860-828-0381
Web Address: http://www.amatom.com • E-Mail: sales@amatom.com

Specifications

MATERIALS CHART

MATERIAL	CODE LETTER	MATERIAL SPECIFICATIONS
BRASS	B	ASTM B16 ALLOY 360, 353
ALUMINUM	A	[1]QQ-A-225/3 (2011-T3) QQ-A-200/8 QQ-A-225/6 (2024-T4) QQ-A-225/8 (6061-T6) QQ-A-200/9 (6063-T5)
STAINLESS STEEL	SS	ASTM 582
STEEL	S	ASTM A108-81
NYLON	N	LP-410

NOTES: 1. Depending upon application

ANTI-ROTATION TECHNICAL DATA

INSTALLATION DATA

THREAD SIZE	3 x 0.5	3.5 x 0.6	4 x 0.7	5 x 0.8
SHANK DIAM. "C" DIM.	4.5MM	5.7MM	6.7MM	7.2MM
X DIM. (HOLE IN PANEL)	4.2MM	5.4MM	6.35MM	6.9MM

Tolerance on X Dim. (Hole in Panel) +.13 -.00MM

PERFORMANCE DATA
AVERAGE TORQUE LOAD (Newton-metres)*

METHOD OF INSTALLATION	THREAD 3 x 0.5	THREAD 3.5 x 0.6	THREAD 4 x 0.7	THREAD 5 x 0.8
STRAIGHT HOLE	3.95 N-m	4.5 N-m	5.6 N-m	7.9 N-m

Your torque loads may vary due to differences in installation parameters.
Tests performed on Epoxy Glass G10 boards.

*One N-m (Newton-metre) = .7375 ft. lbs.

Swage or Flare as required:

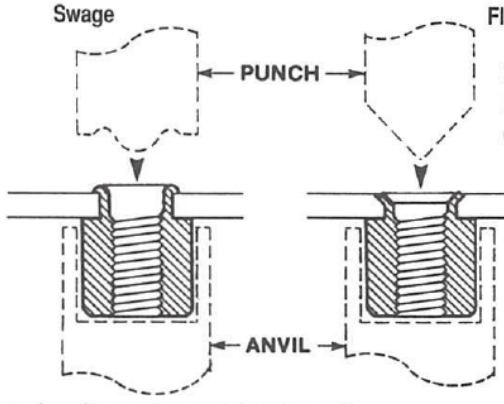

Tool part numbers for swaging are listed along with anti-rotation and swage standoff part descriptions.

FINISHES AVAILABLE

0	No Finish
1A	Anodize-Mil-A-8625 -Type 1 (Chromic) Hot Water Seal (Dk. Gray)
1B	Anodize-Mil-A-8625 -Type 2 (Sulfuric) Hot Water Seal (Clear)
1C	Anodize-Mil-A-8625 -Type 2 (Sulfuric) Dichromate Seal (Yellow/Green)
2	Anodize-Mil-A-8625 Black Type 2
3	Cadmium Plate-QQ-P-416 Class 3- Clear Chromate Special Order
3B	Cadmium Plate-QQ-P-416 Class 3, Type 2-Color Chromate Special Order
4	Nickel Plate-QQ-N-290 Grade G
6A	Brass Ebonal "C" -Mil-F-495
6B	Stainless Steel "Black Oxide" -Mil-C-13924
7	Passivate-QQ-P3-35
8	Caustic Etch
10A	Alodine 1200
14	Electro Tin Plate-Mil-T-10727-Type 1
*14A	Electro Tin Solder 60/40 per M230 Mil-F-14072
14B	Tin Plate over Copper Flash
15	Bright Dip (Brass Finish)
16	Iridite-Clear-Mil-C-5541
17	Iridite-Gold-# Mil-C-5541
28	Zinc Plate .0002 thick ASTM-B-633 Type
29	Solder Plate 0.0003-0.001 thick (Solder per QQ-S-571, Sn60) over Nickel Plate 0.0001-0.0005

*Not suitable for 2.5 x 0.45 or smaller threads, specify oversized tap when ordering other thread sizes.

TOLERANCES

Tolerances in manufacture of Standoffs and Spacers
Length: up to 100MM long ± .13MM
O.D.: ± .356MM

FUNCTIONABILITY

The dimensions as listed in this manual are functional. Amatom's hardware is inspected Per MIL-STD-105 during production and rechecked before shipment. Amatom reserves the right to make adjustments in dimensions and specifications at any time without notice. Customer's inspection should be determined primarily on functionability.

CONVERSION TABLE

To convert inches to millimeters multipy inches x 25.4

To convert millimeters to inches multiply millimeters x 0.039370

METRIC STANDOFFS 4.5MM

ROUND • HEX

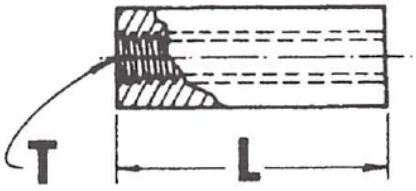

BREAK EDGES

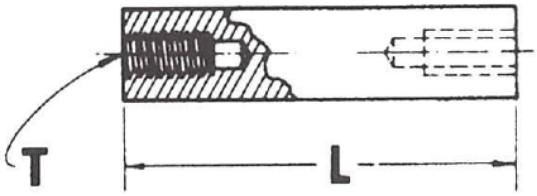

C'SK I.D.

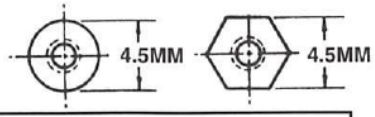

LENGTH (MM)	PART NO.	
	ROUND	HEX
3	19000	19050
5	19002	19052
6	19003	19053
8	19005	19055
10	19007	19057
11	19008	19058
13	19010	19060
14	19011	19061
16	19013	19063
19	19016	19066
22	19019	19069
25	19022	19072
27	19024	19074
29	19026	19076
30	19027	19077
32	19029	19079
33	19030	19080
35	19032	19082
37	19034	19084
38	19035	19085
40	19037	19087
41	19038	19088
44	19041	19091
48	19045	19095
51	19048	19098

PART NUMBER ORDERING SYSTEM

XXXXX - X - XXXX - XX

PART NO. | THREAD | MATERIAL | FINISH

Refer to page 43 for Thread Depth or Length.
Refer to page 44 for Finish Codes.
For parts not listed contact sales office.

THREAD CODE	
THREAD	CODE
M2.5 x 0.45	2545
M3 x 0.5	0350

MATERIAL	CODE
Aluminum	A
Brass	B
Steel	S
Stainless Steel	SS
Nylon	N

5 Pasco Hill Road • Cromwell, CT 06416-1093
Phone: 860-828-0847 • Call Toll Free: 800-243-6032 • Fax: 860-828-0381
Web Address: http://www.amatom.com • E-Mail: sales@amatom.com

METRIC STANDOFFS 6MM & 6.35MM

ROUND • HEX

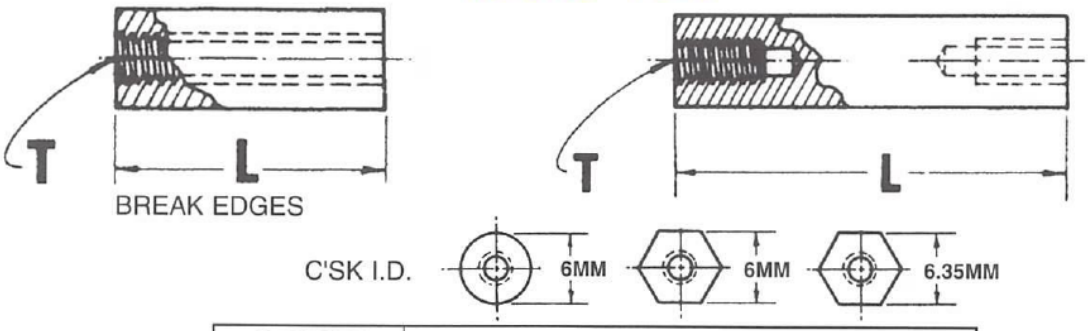

LENGTH (MM)	PART NO. ROUND	6MM HEX	6.35MM HEX*
3	19100	19150	19150
5	19102	19152	19152
6	19103	19153	19153
8	19105	19155	19155
10	19107	19157	19157
11	19108	19158	19158
13	19110	19160	19160
14	19111	19161	19161
16	19113	19163	19163
19	19116	19166	19166
22	19119	19169	19169
25	19122	19172	19172
27	19124	19174	19174
29	19126	19176	19176
30	19127	19177	19177
32	19129	19179	19179
33	19130	19180	19180
35	19132	19182	19182
37	19134	19184	19184
38	19135	19185	19185
40	19137	19187	19187
41	19138	19188	19188
44	19141	19191	19191
48	19145	19195	19195
51	19148	19198	19198

*Available in Nylon Only.

Refer to page 43 for Thread Depth.
Refer to page 44 for Finish Codes.
For parts not listed contact sales office.

PART NUMBER ORDERING SYSTEM

XXXXX - X - XXXX - XX

PART NO. | THREAD | MATERIAL | FINISH

THREAD CODE	
THREAD	CODE
M3 x 0.5	0350
M3.5 x 0.6	3560
M4 x 0.7	0470
M5 x 0.8	0580

MATERIAL	CODE
Aluminum	A
Brass	B
Steel	S
Stainless Steel	SS
Nylon (not available in 6MM Hex)	N

5 Pasco Hill Road • Cromwell, CT 06416-1093
Phone: 860-828-0847 • Call Toll Free: 800-243-6032 • Fax: 860-828-0381
Web Address: http://www.amatom.com • E-Mail: sales@amatom.com

METRIC STANDOFFS 8MM

ROUND • HEX

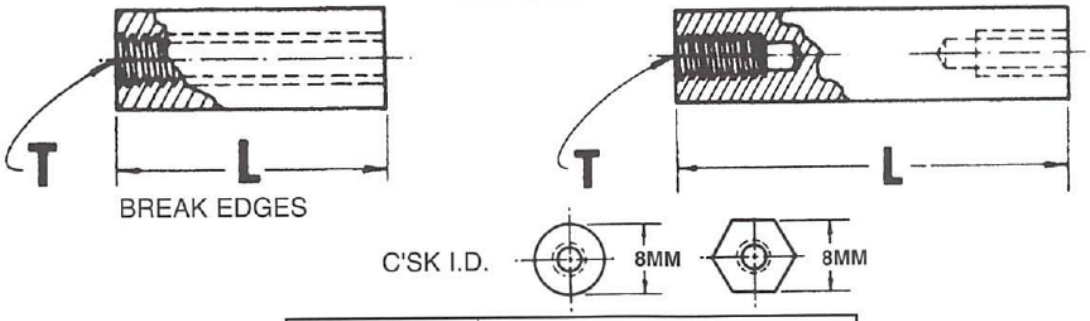

LENGTH (MM)	PART NO.	
	ROUND	HEX
3	19200	19250
5	19202	19252
6	19203	19253
8	19205	19255
10	19207	19257
11	19208	19258
13	19210	19260
14	19211	19261
16	19213	19263
19	19216	19266
22	19219	19269
25	19222	19272
27	19224	19274
29	19226	19276
30	19227	19277
32	19229	19279
33	19230	19280
35	19232	19282
37	19234	19284
38	19235	19285
40	19237	19287
41	19238	19288
44	19241	19291
48	19245	19295
51	19248	19298

Refer to page 43 for Thread Depth.
Refer to page 44 for Finish Codes.
For parts not listed contact sales office.

PART NUMBER ORDERING SYSTEM

XXXXX - X - XXXX - XX

PART NO. | THREAD | MATERIAL | FINISH

THREAD CODE	
THREAD	CODE
M3 x 0.5	0350
M3.5 x 0.6	3560
M4 x 0.7	0470
M5 x 0.8	0580

MATERIAL	CODE
Aluminum	A
Brass	B
Steel	S
Stainless Steel (not available in hex)	SS
Nylon	N

5 Pasco Hill Road • Cromwell, CT 06416-1093
Phone: 860-828-0847 • Call Toll Free: 800-243-6032 • Fax: 860-828-0381
Web Address: http://www.amatom.com • E-Mail: sales@amatom.com

AMATOM®

METRIC STANDOFFS 10MM

ROUND • HEX

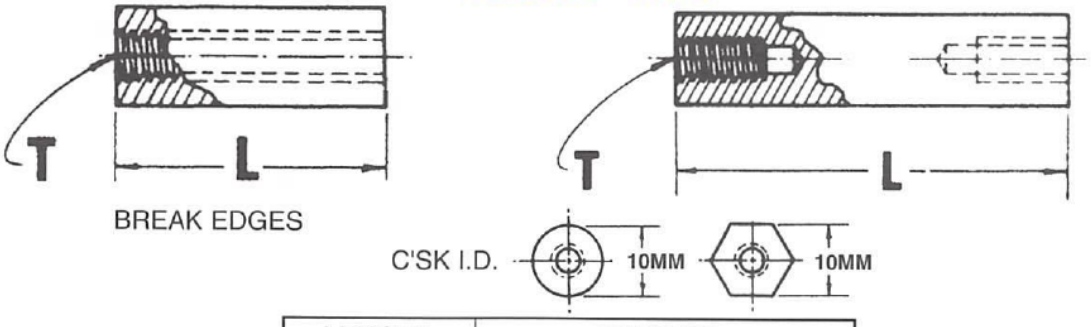

LENGTH (MM)	PART NO.	
	ROUND	HEX
3	19300	19350
5	19302	19352
6	19303	19353
8	19305	19355
10	19307	19357
11	19308	19358
13	19310	19360
14	19311	19361
16	19313	19363
19	19316	19366
22	19319	19369
25	19322	19372
27	19324	19374
29	19326	19376
30	19327	19377
32	19329	19379
33	19330	19380
35	19332	19382
37	19334	19384
38	19335	19385
40	19337	19387
41	19338	19388
44	19341	19391
48	19345	19395
51	19348	19398

PART NUMBER ORDERING SYSTEM

XXXXX - X - XXXX - XX

PART NO. | THREAD | MATERIAL | FINISH

Refer to page 43 for Thread Depth.
Refer to page 44 for Finish Codes.
For parts not listed contact sales office.

THREAD CODE	
THREAD	CODE
M3.5 x 0.6	3560
M4 x 0.7	0470
M5 x 0.8	0580

MATERIAL	CODE
Aluminum	A
Brass	B
Steel	S
Stainless Steel	SS
Nylon	N

5 Pasco Hill Road • Cromwell, CT 06416-1093
Phone: 860-828-0847 • Call Toll Free: 800-243-6032 • Fax: 860-828-0381
Web Address: http://www.amatom.com • E-Mail: sales@amatom.com

METRIC STANDOFFS 13MM

ROUND • HEX

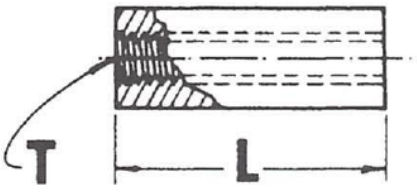

BREAK EDGES

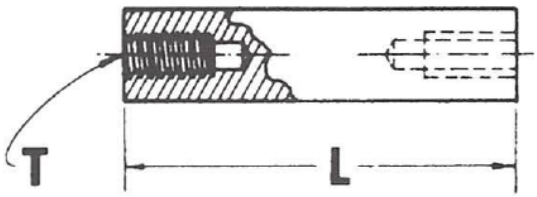

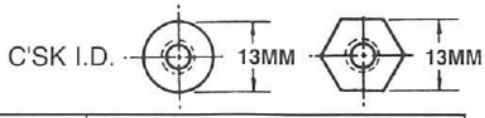

LENGTH (MM)	PART NO.	
	ROUND	HEX
3	19400	19450
5	19402	19452
6	19403	19453
8	19405	19455
10	19407	19457
11	19408	19458
13	19410	19460
14	19411	19461
16	19413	19463
19	19416	19466
22	19419	19469
25	19422	19472
27	19424	19474
29	19426	19476
30	19427	19477
32	19429	19479
33	19430	19480
35	19432	19482
37	19434	19484
38	19435	19485
40	19437	19487
41	19438	19488
44	19441	19491
48	19445	19495
51	19448	19498

PART NUMBER ORDERING SYSTEM

XXXXX - X - XXXX - XX

PART NO. | THREAD | MATERIAL | FINISH

Refer to page 43 for Thread Depth.
Refer to page 44 for Finish Codes.
For parts not listed contact sales office.

THREAD CODE	
THREAD	CODE
M4 x 0.7	0470
M5 x 0.8	0580
M6 x 1	0610

MATERIAL	CODE
Aluminum	A
Brass	B
Steel	S
Stainless Steel	SS
Nylon	N

5 Pasco Hill Road • Cromwell, CT 06416-1093
Phone: 860-828-0847 • Call Toll Free: 800-243-6032 • Fax: 860-828-0381
Web Address: http://www.amatom.com • E-Mail: sales@amatom.com

AMATOM®

METRIC ROUND SPACERS

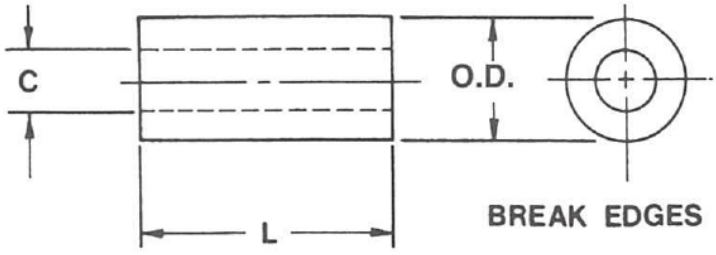

Length (MM)	PART NO.				
	4.5MM O.D.	6MM O.D.	8MM O.D.	10MM O.D.	13MM O.D.
3	19500	19550	19600	19650	19700
5	19502	19552	19602	19652	19702
6	19503	19553	19603	19653	19703
8	19505	19555	19605	19655	19705
10	19507	19557	19607	19657	19707
11	19508	19558	19608	19658	19708
13	19510	19560	19610	19660	19710
14	19511	19561	19611	19661	19711
16	19513	19563	19613	19663	19713
19	19516	19566	19616	19666	19716
22	19519	19569	19619	19669	19719
25	19522	19572	19622	19672	19722
27	19524	19574	19624	19674	19724
29	19526	19576	19626	19676	19726
30	19527	19577	19627	19678	19727
32	19529	19579	19629	19679	19729
33	19530	19580	19630	19680	19730
35	19532	19582	19632	19682	19732
37	19534	19584	19634	19684	19734
38	19535	19585	19635	19685	19735
40	19537	19587	19637	19687	19737
41	19538	19588	19638	19688	19738
44	19541	19591	19641	19691	19741
48	19545	19595	19645	19695	19745
51	19548	19598	19648	19698	19748

NOTE: Maximum and Minimum I.D. on all standard Amatom spacers will conform to clearance hole range chart on page 43.

PART NUMBER ORDERING SYSTEM

XXXXX - X - XXXX - XX

PART NO. | CLEARANCE HOLE CODE | MATERIAL | FINISH

CLEARANCE HOLE (I.D.) CODE								
THREAD SIZE	CLEARANCE HOLE / I.D.	I.D. CODE	O.D.					
M2.5	2.9	0029	4.5					
M3.0	3.4	0034	4.5	6	8			
M3.5	4.0	0040		6	8	10		
M4.0	4.5	0045		6	8	10	13	
M5.0	5.6	0056		6	8	10	13	
M6.3	7.1	0071					13	
M8.0	9.0	0090					13	

Refer to page 44 for Finish Codes.
For parts not listed contact sales office.

MATERIAL	CODE
Aluminum	A
Brass	B
Stainless Steel	SS
Nylon	N

5 Pasco Hill Road • Cromwell, CT 06416-1093
Phone: 860-828-0847 • Call Toll Free: 800-243-6032 • Fax: 860-828-0381
Web Address: http://www.amatom.com • E-Mail: sales@amatom.com

4.5MM SWAGE TYPE ROUND STANDOFFS

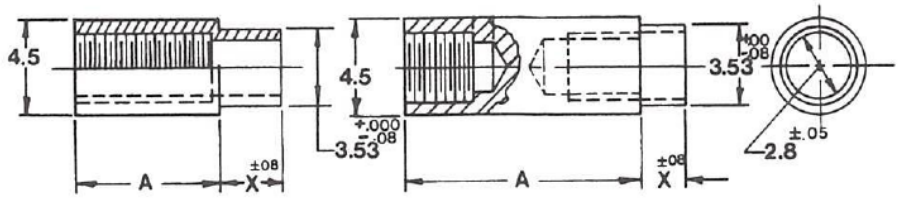

Length "A" (MM)	Part No.
3	19780
5	19782
6	19783
8	19785
10	19787
11	19788
13	19790
14	19791
16	19793
19	19796
22	19799
25	19802
30	19807
32	19809
35	19812
38	19815
44	19821
51	19828

Swage Tooling		
Punch	Anvil	Body Length
PSP 607	PSA 139-1H	3-5MM
	139-2H	6-11MM
	139-3H	13-16MM
	139-4H	19-25MM

See Page 43 for Depth of Thread.
See Page 44 for Installation Instructions.
Refer to page 44 for Finish Codes.
For parts not listed contact sales office.

PART NUMBER ORDERING SYSTEM

XXXXXX - X - XXXX

PART NO. | SHANK | MATERIAL | THREAD

SHANK/BOARD THICKNESS CODE		
X	T	
Shank	Board Thickness	Code
M1.9	0.8	A
M2.7	1.6	B
M3.4	2.4	C
M4.2	3.2	D
M5.8	4.8	E
M7.4	6.4	F

MATERIAL	CODE
Aluminum	A
Brass	B
Steel	S
Stainless Steel	SS

THREAD CODE	
THREAD	CODE
M2.5 x 0.45	2545

5 Pasco Hill Road • Cromwell, CT 06416-1093
Phone: 860-828-0847 • Call Toll Free: 800-243-6032 • Fax: 860-828-0381
Web Address: http://www.amatom.com • E-Mail: sales@amatom.com

AMATOM®

6MM SWAGE TYPE ROUND STANDOFFS

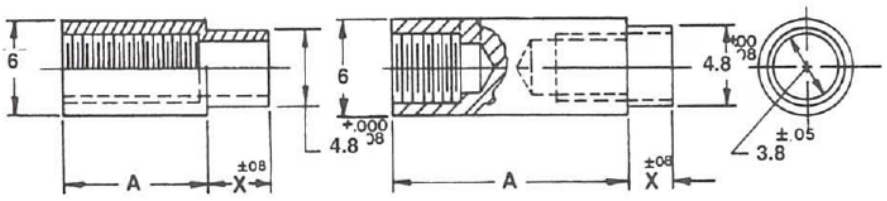

Length "A" (MM)	Part No.
3	19830
5	19832
6	19833
8	19835
10	19837
11	19838
13	19840
14	19841
16	19843
19	19846
22	19849
25	19852
30	19857
32	19859
35	19862
38	19865
44	19871
51	19878

Swage Tooling		
Punch	Anvil	Body Length
PSP 612	PSA 110-1	3-5MM
	110-2	6-11MM
	110-3	13-16MM
	110-4	19-25MM

See Page 43 for Depth of Thread.
See Page 44 for Installation Instructions.
Refer to page 44 for Finish Codes.
For parts not listed contact sales office.

PART NUMBER ORDERING SYSTEM

XXXXXX - X - XXXX

PART NO. | SHANK | MATERIAL | THREAD

SHANK/BOARD THICKNESS CODE		
X	T	
Shank	Board Thickness	Code
1.9	0.8	A
2.7	1.6	B
3.4	2.4	C
4.2	3.2	D
5.8	4.8	E
7.4	6.4	F

MATERIAL	CODE
Aluminum	A
Brass	B
Steel	S
Stainless Steel	SS

THREAD CODE	
THREAD	CODE
M3 x 0.5	0350
M3.5 x 0.6	3560

5 Pasco Hill Road • Cromwell, CT 06416-1093
Phone: 860-828-0847 • Call Toll Free: 800-243-6032 • Fax: 860-828-0381
Web Address: http://www.amatom.com • E-Mail: sales@amatom.com

AMATOM®

8MM SWAGE TYPE ROUND STANDOFFS

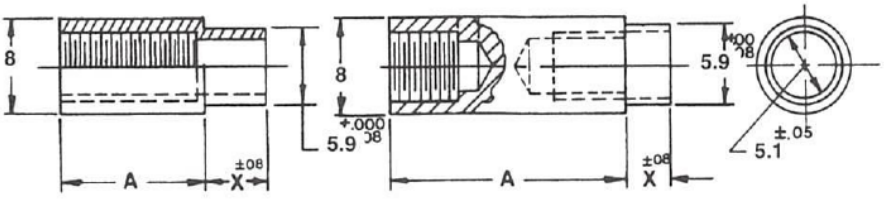

Length "A" (MM)	Part No.
3	19880
5	19882
6	19883
8	19885
10	19887
11	19888
13	19890
14	19891
16	19893
19	19896
22	19899
25	19902
30	19907
32	19909
35	19912
38	19915
44	19921
51	19928

Swage Tooling		
Punch	Anvil	Body Length
PSP 675	PSA 202-1	3-5MM
	202-2	6-11MM
	202-3	13-16MM
	202-4	19-25MM

See Page 43 for Depth of Thread.
See Page 44 for Installation Instructions.
Refer to page 44 for Finish Codes.
For parts not listed contact sales office.

PART NUMBER ORDERING SYSTEM

XXXXXX - X - XXXX

PART NO. | MATERIAL | SHANK | THREAD

SHANK/BOARD THICKNESS CODE		
X Shank	T Board Thickness	Code
1.9	0.8	A
2.7	1.6	B
3.4	2.4	C
4.2	3.2	D
5.8	4.8	E
7.4	6.4	F

MATERIAL	CODE
Aluminum	A
Brass	B
Steel	S
Stainless Steel	SS

THREAD CODE	
THREAD	CODE
M3.5 x 0.6	3560
M4 x 0.7	0470

5 Pasco Hill Road • Cromwell, CT 06416-1093
Phone: 860-828-0847 • Call Toll Free: 800-243-6032 • Fax: 860-828-0381
Web Address: http://www.amatom.com • E-Mail: sales@amatom.com

4.5MM HEX STANDOFFS MALE/FEMALE

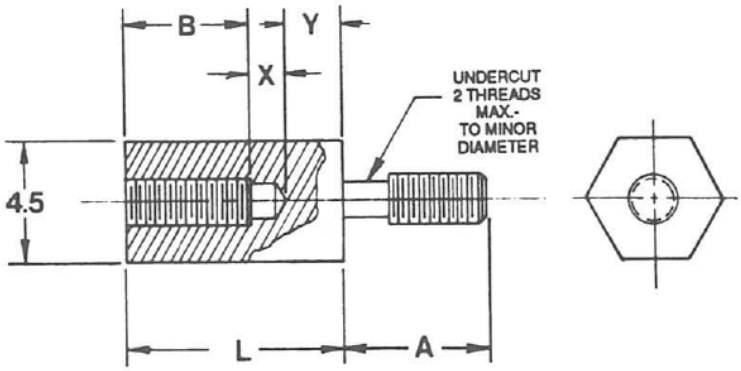

ALL DIMENSIONS IN MM.

CHART A				APPROX NO. OF THDS MIN.
"L" MM	P/N	THREAD	"B" MIN	
5	19930	M2.5 x 0.45	1.9	4.2
		M3.0 x .05	1.8	3.5
6	19931	M2.5 x 0.45	3.1	5.0
		M3.0 x 0.5	3.1	6.0
8	19933	M3.0 x 0.5	4.0	7.8

Y=.032 MIN

CHART B				
THREAD	A	B	Y	X
M2.5 x 0.45	3.97	4.76	0.8	1.5
M3.0 x 0.5	4.76	6.35	0.8	1.5
M3.5 x 0.6	6.35	9.53	1.0	1.9
M4.0 x 0.7	9.53	11.1	1.3	1.9
M5.0 x 0.8	9.53	12.7	1.7	1.9

Chart "B" Standards for P/N Below Solid Line.

IMPORTANT!!! FOR ITEMS ABOVE SOLID LINE SEE CHART "A" FOR DEPTH OF FEMALE THREAD DIMENSION "B" ON DRAWING.

Refer to page 44 for Finish Codes.
For parts not listed contact sales office.

L Length (MM)	BRASS (B)		ALUM (A)		NYLON (N)	
	Thread M2.5 x 0.45	Thread M3 x 0.5	Thread M2.5 x 0.45	Thread M3 x 0.5	Thread M2.5 x 0.45	Thread M3 x 0.5
5	19930-B-2545	19930-B-0350	19930-A-2545	19930-A-0350	19930-N-2545	19930-N-0350
6	19931-B-2545	19931-B-0350	19931-A-2545	19931-A-0350	19931-N-2545	19931-N-0350
8	19933-B-2545	19933-B-0350	19933-A-2545	19933-A-0350	19933-N-2545	19933-N-0350
10	19935-B-2545	19935-B-0350	19935-A-2545	19935-A-0350	19935-N-2545	19935-N-0350
11	19936-B-2545	19936-B-0350	19936-A-2545	19936-A-0350	19936-N-2545	19936-N-0350
13	19938-B-2545	19938-B-0350	19938-A-2545	19938-A-0350	19938-N-2545	19938-N-0350
14	19939-B-2545	19939-B-0350	19939-A-2545	19939-A-0350	19939-N-2545	19939-N-0350
16	19941-B-2545	19941-B-0350	19941-A-2545	19941-A-0350	19941-N-2545	19941-N-0350
19	19944-B-2545	19944-B-0350	19944-A-2545	19944-A-0350	19944-N-2545	19944-N-0350
22	19947-B-2545	19947-B-0350	19947-A-2545	19947-A-0350	19947-N-2545	19947-N-0350
25	19950-B-2545	19950-B-0350	19950-A-2545	19950-A-0350	19950-N-2545	19950-N-0350

5 Pasco Hill Road • Cromwell, CT 06416-1093
Phone: 860-828-0847 • Call Toll Free: 800-243-6032 • Fax: 860-828-0381
Web Address: http://www.amatom.com • E-Mail: sales@amatom.com

6 MM HEX STANDOFFS MALE/FEMALE

CHART A				APPROX NO. OF THDS MIN.
"L" MM	P/N	THREAD	"B" MIN	
6	19955	M3.0 x 0.5	3.1	6.0
		M3.5 x 0.6	2.5	4.1
		M4.0 x 0.7	2.1	2.9
10	19959	M3.5 x 0.6	6.3	8.8
		M4.0 x 0.7	6.0	8.4
13	19962	M4.0 x 0.7	8.8	12.3

Y=.032 MIN

CHART B				
THREAD	A	B	Y	X
M2.5 x 0.45	3.97	4.76	0.8	1.5
M3.0 x 0.5	4.76	6.35	0.8	1.5
M3.5 x 0.6	6.35	9.53	1.0	1.9
M4.0 x 0.7	9.53	11.1	1.3	1.9
M5.0 x 0.8	9.53	12.7	1.7	1.9

Chart "B" Standards for P/N Below Solid Line.

ALL DIMENSIONS IN MM.

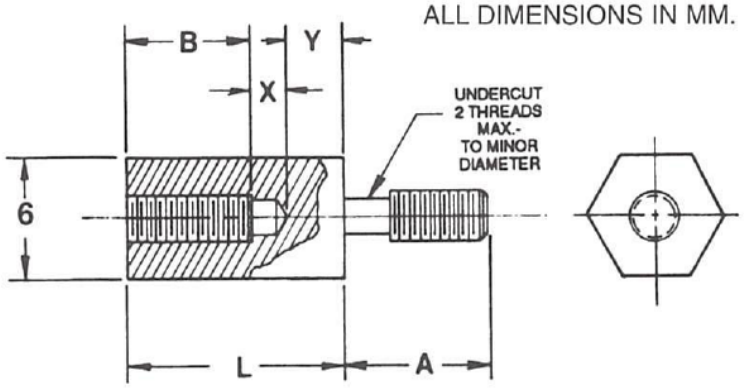

IMPORTANT!!! FOR ITEMS ABOVE SOLID LINE SEE CHART "A" FOR DEPTH OF FEMALE THREAD DIMENSION "B" ON DRAWING.

6MM HEX

L Length (MM)	BRASS (B)			ALUM (A)			STAINLESS STEEL (SS)		
	Thread M3 x 0.5	Thread M3.5 x 0.6	Thread M4 x 0.7	Thread M3 x 0.5	Thread M3.5 x 0.6	Thread M4 x 0.7	Thread M3 x 0.5	Thread M3.5 x 0.6	Thread M4 x 0.7
6	19955-B 0350	19955-B 3560	19955-B 0470	19955-A 0350	19955-A 3560	19955-A 0470	19955-SS 0350	19955-SS 3560	19955-SS 0470
10	19959-B 0350	19959-B 3560	19959-B 0470	19959-A 0350	19959-A 3560	19959-A 0470	19959-SS 0350	19959-SS 3560	19959-SS 0470
13	19962-B 0350	19962-B 3560	19962-B 0470	19962-A 0350	19962-A 3560	19962-A 0470	19962-SS 0350	19962-SS 3560	19962-SS 0470
16	19965-B 0350	19965-B 3560	19965-B 0470	19965-A 0350	19965-A 3560	19965-A 0470	19965-SS 0350	19965-SS 3560	19965-SS 0470
19	19968-B 0350	19968-B 3560	19968-B 0470	19968-A 0350	19968-A 3560	19968-A 0470	19968-SS 0350	19968-SS 3560	19968-SS 0470
22	19971-B 0350	19971-B 3560	19971-B 0470	19971-A 0350	19971-A 3560	19971-A 0470	19971-SS 0350	19971-SS 3560	19971-SS 0470
25	19974-B 0350	19974-B 3560	19974-B 0470	19974-A 0350	19974-A 3560	19974-A 0470	19974-SS 0350	19974-SS 3560	19974-SS 0470
30	19979-B 0350	19979-B 3560	19979-B 0470	19979-A 0350	19979-A 3560	19979-A 0470	19979-SS 0350	19979-SS 3560	19979-SS 0470
32	19981-B 0350	19981-B 3560	19981-B 0470	19981-A 0350	19981-A 3560	19981-A 0470	19981-SS 0350	19981-SS 3560	19981-SS 0470
35	19984-B 0350	19984-B 3560	19984-B 0470	19984-A 0350	19984-A 3560	19984-A 0470	19984-SS 0350	19984-SS 3560	19984-SS 0470
38	19987-B 0350	19987-B 3560	19987-B 0470	19987-A 0350	19987-A 3560	19987-A 0470	19987-SS 0350	19987-SS 3560	19987-SS 0470
41	19990-B 0350	19990-B 3560	19990-B 0470	19990-A 0350	19990-A 3560	19990-A 0470	19990-SS 0350	19990-SS 3560	19990-SS 0470
44	19993-B 0350	19993-B 3560	19993-B 0470	19993-A 0350	19993-A 3560	19993-A 0470	19993-SS 0350	19993-SS 3560	19993-SS 0470
48	19997-B 0350	19997-B 3560	19997-B 0470	19997-A 0350	19997-A 3560	19997-A 0470	19997-SS 0350	19997-SS 3560	19997-SS 0470
51	20000-B 0350	20000-B 3560	20000-B 0470	20000-A 0350	20000-A 3560	20000-A 0470	20000-SS 0350	20000-SS 3560	20000-SS 0470

6.35MM HEX

NYLON (N)		
Thread M3 x 0.5	Thread M3.5 x 0.6	Thread M4 x 0.7
19955-N 0350	19955-N 3560	19955-N 0470
19959-N 0350	19959-N 3560	19959-N 0470
19962-N 0350	19962-N 3560	19962-N 0470
19965-N 0350	19965-N 3560	19965-N 0470
19968-N 0350	19968-N 3560	19968-N 0470
19971-N 0350	19971-N 3560	19971-N 0470
19974-N 0350	19974-N 3560	19974-N 0470
19979-N 0350	19979-N 3560	19979-N 0470
19981-N 0350	19981-N 3560	19981-N 0470
19984-N 0350	19984-N 3560	19984-N 0470
19987-N 0350	19987-N 3560	19987-N 0470
19990-N 0350	19990-N 3560	19990-N 0470
19993-N 0350	19993-N 3560	19993-N 0470
19997-N 0350	19997-N 3560	19997-N 0470
20000-N 0350	20000-N 3560	20000-N 0470

5 Pasco Hill Road • Cromwell, CT 06416-1093
Phone: 860-828-0847 • Call Toll Free: 800-243-6032 • Fax: 860-828-0381
Web Address: http://www.amatom.com • E-Mail: sales@amatom.com

10MM HEX STANDOFFS MALE/FEMALE

CHART A				APPROX NO. OF THDS MIN.
"L" MM	P/N	THREAD	"B" MIN	
6	20001	M3.5 x 0.6	2.5	4.0
		M4.0 x 0.7	2.0	2.8
		M5.0 x 0.8	1.7	2.1
10	20005	M3.5 x 0.6	6.0	9.8
		M4.0 x 0.7	5.7	8.0
		M5.0 x 0.8	5.5	6.7
13	20008	M4.0 x 0.7	8.8	12.3
		M5.0 x 0.8	8.5	10.4
16	20011	M5.0 x 0.8	11.0	13.5

Y=.032 MIN

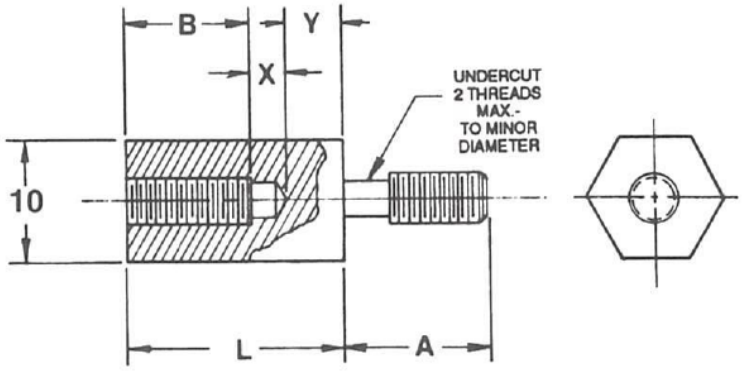

CHART B				
THREAD	A	B	Y	X
M2.5 x 0.45	3.97	4.76	0.8	1.5
M3.0 x 0.5	4.76	6.35	0.8	1.5
M3.5 x 0.6	6.35	9.53	1.0	1.9
M4.0 x 0.7	9.53	11.1	1.3	1.9
M5.0 x 0.8	9.53	12.7	1.7	1.9

Chart "B" Standards for P/N Below Solid Line.

IMPORTANT!!! FOR ITEMS ABOVE SOLID LINE SEE CHART "A" FOR DEPTH OF FEMALE THREAD DIMENSION "B" ON DRAWING.

L	BRASS (B)			ALUM (A)			STAINLESS STEEL (SS)			NYLON (N)		
Length (MM)	Thread M3.5 x 0.6	Thread M4 x 0.7	Thread M5 x 0.8	Thread M3.5 x 0.6	Thread M4 x 0.7	Thread M5 x 0.8	Thread M3.5 x 0.6	Thread M4 x 0.7	Thread M5 x 0.8	Thread M3.5 x 0.6	Thread M4 x 0.7	Thread M5 x 0.8
6	20001-B 3560	20001-B 0470	20001-B 0580	20001-A 3560	20001-A 0470	20001-A 0580	20001-SS 3560	20001-SS 0470	20001-SS 0580	20001-N 3560	20001-N 0470	20001-N 0580
10	20005-B 3560	20005-B 0470	20005-B 0580	20005-A 3560	20005-A 0470	20005-A 0580	20005-SS 3560	20005-SS 0470	20005-SS 0580	20005-N 3560	20005-N 0470	20005-N 0580
13	20008-B 3560	20008-B 0470	20008-B 0580	20008-A 3560	20008-A 0470	20008-A 0580	20008-SS 3560	20008-SS 0470	20008-SS 0580	20008-N 3560	20008-N 0470	20008-N 0580
16	20011-B 3560	20011-B 0470	20011-B 0580	20011-A 3560	20011-A 0470	20011-A 0580	20011-SS 3560	20011-SS 0470	20011-SS 0580	20011-N 3560	20011-N 0470	20011-N 0580
19	20014-B 3560	20014-B 0470	20014-B 0580	20014-A 3560	20014-A 0470	20014-A 0580	20014-SS 3560	20014-SS 0470	20014-SS 0580	20014-N 3560	20014-N 0470	20014-N 0580
22	20017-B 3560	20017-B 0470	20017-B 0580	20017-A 3560	20017-A 0470	20017-A 0580	20017-SS 3560	20017-SS 0470	20017-SS 0580	20017-N 3560	20017-N 0470	20017-N 0580
25	20020-B 3560	20020-B 0470	20020-B 0580	20020-A 3560	20020-A 0470	20020-A 0580	20020-SS 3560	20020-SS 0470	20020-SS 0580	20020-N 3560	20020-N 0470	20020-N 0580
30	20025-B 3560	20025-B 0470	20025-B 0580	20025-A 3560	20025-A 0470	20025-A 0580	20025-SS 3560	20025-SS 0470	20025-SS 0580	20025-N 3560	20025-N 0470	20025-N 0580
32	20027-B 3560	20027-B 0470	20027-B 0580	20027-A 3560	20027-A 0470	20027-A 0580	20027-SS 3560	20027-SS 0470	20027-SS 0580	20027-N 3560	20027-N 0470	20027-N 0580
35	20030-B 3560	20030-B 0470	20030-B 0580	20030-A 3560	20030-A 0470	20030-A 0580	20030-SS 3560	20030-SS 0470	20030-SS 0580	20030-N 3560	20030-N 0470	20030-N 0580
38	20033-B 3560	20033-B 0470	20033-B 0580	20033-A 3560	20033-A 0470	20033-A 0580	20033-SS 3560	20033-SS 0470	20033-SS 0580	20033-N 3560	20033-N 0470	20033-N 0580
41	20036-B 3560	20036-B 0470	20036-B 0580	20036-A 3560	20036-A 0470	20036-A 0580	20036-SS 3560	20036-SS 0470	20036-SS 0580	20036-N 3560	20036-N 0470	20036-N 0580
44	20039-B 3560	20039-B 0470	20039-B 0580	20039-A 3560	20039-A 0470	20039-A 0580	20039-SS 3560	20039-SS 0470	20039-SS 0580	20039-N 3560	20039-N 0470	20039-N 0580
48	20043-B 3560	20043-B 0470	20043-B 0580	20043-A 3560	20043-A 0470	20043-A 0580	20043-SS 3560	20043-SS 0470	20043-SS 0580	20043-N 3560	20043-N 0470	20043-N 0580
51	20046-B 3560	20046-B 0470	20046-B 0580	20046-A 3560	20046-A 0470	20046-A 0580	20046-SS 3560	20046-SS 0470	20046-SS 0580	20046-N 3560	20046-N 0470	20046-N 0580

5 Pasco Hill Road • Cromwell, CT 06416-1093
Phone: 860-828-0847 • Call Toll Free: 800-243-6032 • Fax: 860-828-0381
Web Address: http://www.amatom.com • E-Mail: sales@amatom.com

AMATOM®

6MM ROUND ANTI-ROTATION STANDOFFS

Dimensions and Tolerances	
Thread Size	M3.0 x 0.5
E	3.3MM ± .05
C	4.5MM + .10 − .05
D	6.0MM ± .13
*X	2.2MM ± .08
H	4.2MM +.000 − .10

M3 x 0.5 THREAD

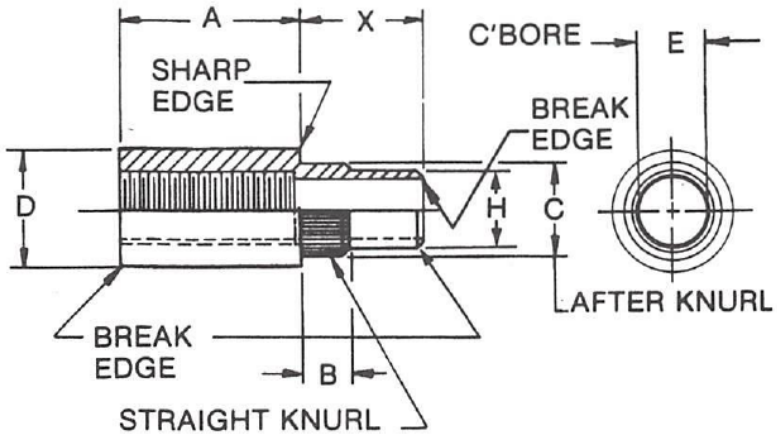

SWAGE TOOLING
Punch PSP 062-4

ANVIL	BODY LENGTH
PSA 110-1	3-5MM
2	6-11MM
3	13-16MM
4	19-25MM

*Special application for 1.6 thick board/Press-fit & Stake.

A	X	B	T	BRASS (B)	STEEL (S)
LGTH (MM) ±.1	Shank ±.1	Knurl ±.1	Board Thick.	Thread M3 x 0.5	Thread M3 x 0.5
3	1.9	0.8	0.8	21001A-B-0350	21001A-S-0350
3	2.7	1.5	1.6	21001B-B-0350	21001B-S-0350
3	3.4	1.5	2.4	21001C-B-0350	21001C-S-0350
3	4.2	1.5	3.2	21001D-B-0350	21001D-S-0350
*3	2.2	1.5	1.6	21102B-B-0350	21102B-S-0350
5	1.9	0.8	0.8	21003A-B-0350	21003A-S-0350
5	2.7	1.5	1.6	21003B-B-0350	21003B-S-0350
5	3.4	1.5	2.4	21003C-B-0350	21003C-S-0350
5	4.2	1.5	3.2	21003D-B-0350	21003D-S-0350
*5	2.2	1.5	1.6	21104B-B-0350	21104B-S-0350
6	1.9	0.8	0.8	21004A-B-0350	21004A-S-0350
6	2.7	1.5	1.6	21004B-B-0350	21004B-S-0350
6	3.4	1.5	2.4	21004C-B-0350	21004C-S-0350
6	4.2	1.5	3.2	21004D-B-0350	21004D-S-0350
*6	2.2	1.5	1.6	21105B-B-0350	21105B-S-0350
8	1.9	0.8	0.8	21006A-B-0350	21006A-S-0350
8	2.7	1.5	1.6	21006B-B-0350	21006B-S-0350
8	3.4	1.5	2.4	21006C-B-0350	21006C-S-0350
8	4.2	1.5	3.2	21006D-B-0350	21006D-S-0350
*8	2.2	1.5	1.6	21107B-B-0350	21107B-S-0350
10	1.9	0.8	0.8	21008A-B-0350	21008A-S-0350
10	2.7	1.5	1.6	21008B-B-0350	21008B-S-0350
10	3.4	1.5	2.4	21008C-B-0350	21008C-S-0350
10	4.2	1.5	3.2	21008D-B-0350	21008D-S-0350
*10	2.2	1.5	1.6	21109B-B-0350	21109B-S-0350
11	1.9	0.8	0.8	21009A-B-0350	21009A-S-0350
11	2.7	1.5	1.6	21009B-B-0350	21009B-S-0350
11	3.4	1.5	2.4	21009C-B-0350	21009C-S-0350
11	4.2	1.5	3.2	21009D-B-0350	21009D-S-0350
*11	2.2	1.5	1.6	21110B-B-0350	21110B-S-0350

A	X	B	T	BRASS (B)	STEEL (S)
LGTH (MM) ±.1	Shank ±.1	Knurl ±.1	Board Thick.	Thread M3 x 0.5	Thread M3 x 0.5
13	1.9	0.8	0.8	21011A-B-0350	21011A-S-0350
13	2.7	1.5	1.6	21011B-B-0350	21011B-S-0350
13	3.4	1.5	2.4	21011C-B-0350	21011C-S-0350
13	4.2	1.5	3.2	21011D-B-0350	21011D-S-0350
*13	2.2	1.5	1.6	21112B-B-0350	21112B-S-0350
14	1.9	0.8	0.8	21012A-B-0350	21012A-S-0350
14	2.7	1.5	1.6	21012B-B-0350	21012B-S-0350
14	3.4	1.5	2.4	21012C-B-0350	21012C-S-0350
14	4.2	1.5	3.2	21012D-B-0350	21012D-S-0350
*14	2.2	1.5	1.6	21113B-B-0350	21113B-S-0350
16	1.9	0.8	0.8	21014A-B-0350	21014A-S-0350
16	2.7	1.5	1.6	21014B-B-0350	21014B-S-0350
16	3.4	1.5	2.4	21014C-B-0350	21014C-S-0350
16	4.2	1.5	3.2	21014D-B-0350	21014D-S-0350
*16	2.2	1.5	1.6	21115B-B-0350	21115B-S-0350
19	1.9	0.8	0.8	21017A-B-0350	21017A-S-0350
19	2.7	1.5	1.6	21017B-B-0350	21017B-S-0350
19	3.4	1.5	2.4	21017C-B-0350	21017C-S-0350
19	4.2	1.5	3.2	21017D-B-0350	21017D-S-0350
*19	2.2	1.5	1.6	21118B-B-0350	21118B-S-0350
22	1.9	0.8	0.8	21020A-B-0350	21020A-S-0350
22	2.7	1.5	1.6	21020B-B-0350	21020B-S-0350
22	3.4	1.5	2.4	21020C-B-0350	21020C-S-0350
22	4.2	1.5	3.2	21020D-B-0350	21020D-S-0350
*22	2.2	1.5	1.6	21121B-B-0350	21121B-S-0350
25	1.9	0.8	0.8	21023A-B-0350	21023A-S-0350
25	2.7	1.5	1.6	21023B-B-0350	21023B-S-0350
25	3.4	1.5	2.4	21023C-B-0350	21023C-S-0350
25	4.2	1.5	3.2	21023D-B-0350	21023D-S-0350
*25	2.2	1.5	1.6	21124B-B-0350	21124B-S-0350

5 Pasco Hill Road • Cromwell, CT 06416-1093
Phone: 860-828-0847 • Call Toll Free: 800-243-6032 • Fax: 860-828-0381
Web Address: http://www.amatom.com • E-Mail: sales@amatom.com

8MM ROUND ANTI-ROTATION STANDOFFS

Dimensions and Tolerances	
Thread Size	M3.5 x 0.6
E	4.5MM ± .05
C	5.7MM + .10 − .05
D	8.0MM ± .13
*X	2.2MM ± .08
H	5.4MM +.000 − .10

M3.5 x 0.6 THREAD

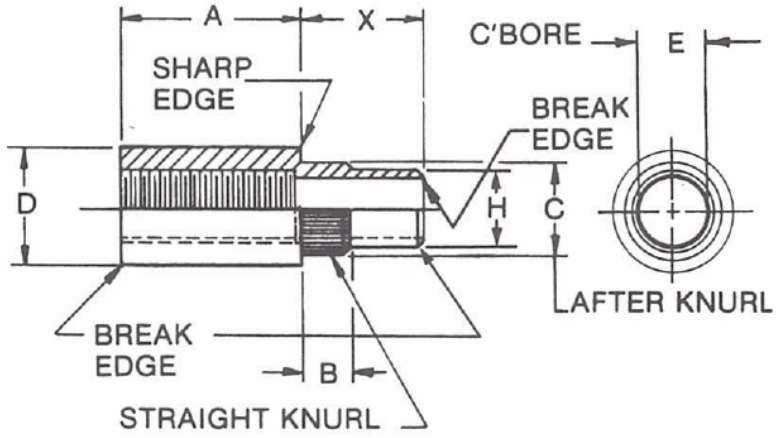

SWAGE TOOLING
Punch PSP 062-6

ANVIL	BODY LENGTH
PSA 202-1	3-5MM
2	6-11MM
3	13-16MM
4	19-25MM

*Special application for 1.6 thick board/Press-fit & Stake.

A	X	B	T	BRASS (B)	STEEL (S)
LGTH (MM) ±.1	Shank ±.1	Knurl ±.1	Board Thick.	Thread M3.5 x 0.5	Thread M3.5 x 0.6
3	1.9	0.8	0.8	21025A-B-0356	21025A-S-0356
3	2.7	1.5	1.6	21025B-B-0356	21025B-S-0356
3	3.4	1.5	2.4	21025C-B-0356	21025C-S-0356
3	4.2	1.5	3.2	21025D-B-0356	21025D-S-0356
*3	2.2	1.5	1.6	21127B-B-0356	21127B-S-0356
5	1.9	0.8	0.8	21027A-B-0356	21027A-S-0356
5	2.7	1.5	1.6	21027B-B-0356	21027B-S-0356
5	3.4	1.5	2.4	21027C-B-0356	21027C-S-0356
5	4.2	1.5	3.2	21027D-B-0356	21027D-S-0356
*5	2.2	1.5	1.6	21129B-B-0356	21129B-S-0356
6	1.9	0.8	0.8	21028A-B-0356	21028A-S-0356
6	2.7	1.5	1.6	21028B-B-0356	21028B-S-0356
6	3.4	1.5	2.4	21028C-B-0356	21028C-S-0356
6	4.2	1.5	3.2	21028D-B-0356	21028D-S-0356
*6	2.2	1.5	1.6	21130B-B-0356	21130B-S-0356
8	1.9	0.8	0.8	21030A-B-0356	21030A-S-0356
8	2.7	1.5	1.6	21030B-B-0356	21030B-S-0356
8	3.4	1.5	2.4	21030C-B-0356	21030C-S-0356
8	4.2	1.5	3.2	21030D-B-0356	21030D-S-0356
*8	2.2	1.5	1.6	21132B-B-0356	21132B-S-0356
10	1.9	0.8	0.8	21032A-B-0356	21032A-S-0356
10	2.7	1.5	1.6	21032B-B-0356	21032B-S-0356
10	3.4	1.5	2.4	21032C-B-0356	21032C-S-0356
10	4.2	1.5	3.2	21032D-B-0356	21032D-S-0356
*10	2.2	1.5	1.6	21134B-B-0356	21134B-S-0356
11	1.9	0.8	0.8	21033A-B-0356	21033A-S-0356
11	2.7	1.5	1.6	21033B-B-0356	21033B-S-0356
11	3.4	1.5	2.4	21033C-B-0356	21033C-S-0356
11	4.2	1.5	3.2	21033D-B-0356	21033D-S-0356
*11	2.2	1.5	1.6	21135B-B-0356	21135B-S-0356

A	X	B	T	BRASS (B)	STEEL (S)
LGTH (MM) ±.1	Shank ±.1	Knurl ±.1	Board Thick.	Thread M3.5 x 0.6	Thread M3.5 x 0.6
13	1.9	0.8	0.8	21035A-B-0356	21035A-S-0356
13	2.7	1.5	1.6	21035B-B-0356	21035B-S-0356
13	3.4	1.5	2.4	21035C-B-0356	21035C-S-0356
13	4.2	1.5	3.2	21035D-B-0356	21035D-S-0356
*13	2.2	1.5	1.6	21137B-B-0356	21137B-S-0356
14	1.9	0.8	0.8	21036A-B-0356	21036A-S-0356
14	2.7	1.5	1.6	21036B-B-0356	21036B-S-0356
14	3.4	1.5	2.4	21036C-B-0356	21036C-S-0356
14	4.2	1.5	3.2	21036D-B-0356	21036D-S-0356
*14	2.2	1.5	1.6	21138B-B-0356	21138B-S-0356
16	1.9	0.8	0.8	21038A-B-0356	21038A-S-0356
16	2.7	1.5	1.6	21038B-B-0356	21038B-S-0356
16	3.4	1.5	2.4	21038C-B-0356	21038C-S-0356
16	4.2	1.5	3.2	21038D-B-0356	21038D-S-0356
*16	2.2	1.5	1.6	21140B-B-0356	21140B-S-0356
19	1.9	0.8	0.8	21041A-B-0356	21041A-S-0356
19	2.7	1.5	1.6	21041B-B-0356	21041B-S-0356
19	3.4	1.5	2.4	21041C-B-0356	21041C-S-0356
19	4.2	1.5	3.2	21041D-B-0356	21041D-S-0356
*19	2.2	1.5	1.6	21143B-B-0356	21143B-S-0356
22	1.9	0.8	0.8	21044A-B-0356	21044A-S-0356
22	2.7	1.5	1.6	21044B-B-0356	21044B-S-0356
22	3.4	1.5	2.4	21044C-B-0356	21044C-S-0356
22	4.2	1.5	3.2	21044D-B-0356	21044D-S-0356
*22	2.2	1.5	1.6	21146B-B-0356	21146B-S-0356
25	1.9	0.8	0.8	21047A-B-0356	21047A-S-0356
25	2.7	1.5	1.6	21047B-B-0356	21047B-S-0356
25	3.4	1.5	2.4	21047C-B-0356	21047C-S-0356
25	4.2	1.5	3.2	21047D-B-0356	21047D-S-0356
*25	2.2	1.5	1.6	21149B-B-0356	21149B-S-0356

5 Pasco Hill Road • Cromwell, CT 06416-1093
Phone: 860-828-0847 • Call Toll Free: 800-243-6032 • Fax: 860-828-0381
Web Address: http://www.amatom.com • E-Mail: sales@amatom.com

8MM ROUND ANTI-ROTATION STANDOFFS

Dimensions and Tolerances	
Thread Size	M4 x 0.7
E	5.4MM ± .05
C	6.7MM + .10 − .05
D	8.0MM ± .13
H	6.35MM +.000 − .10

SWAGE TOOLING
Punch PSP 062-8

ANVIL	BODY LENGTH
PSA 202-1	3-5MM
2	6-11MM
3	13-16MM
4	19-25MM

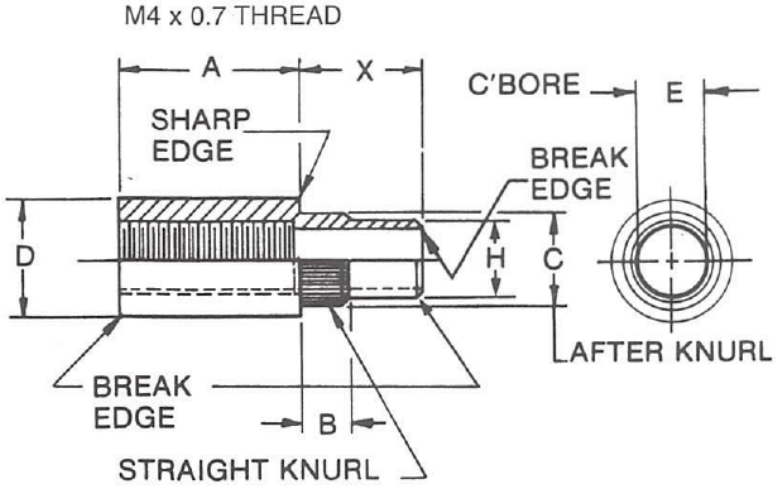

A LGTH (MM) ±.1	X Shank ±.1	B Knurl ±.1	T Board Thick.	BRASS (B) Thread M4 x 0.7	STEEL (S) Thread M4 x 0.7
3	1.9	0.8	0.8	21050A-B-0470	21050A-S-0470
3	2.7	1.5	1.6	21050B-B-0470	21050B-S-0470
3	3.4	1.5	2.4	21050C-B-0470	21050C-S-0470
3	4.2	1.5	3.2	21050D-B-0470	21050D-S-0470
5	1.9	0.8	0.8	21052A-B-0470	21052A-S-0470
5	2.7	1.5	1.6	21052B-B-0470	21052B-S-0470
5	3.4	1.5	2.4	21052C-B-0470	21052C-S-0470
5	4.2	1.5	3.2	21052D-B-0470	21052D-S-0470
6	1.9	0.8	0.8	21053A-B-0470	21053A-S-0470
6	2.7	1.5	1.6	21053B-B-0470	21053B-S-0470
6	3.4	1.5	2.4	21053C-B-0470	21053C-S-0470
6	4.2	1.5	3.2	21053D-B-0470	21053D-S-0470
8	1.9	0.8	0.8	21055A-B-0470	21055A-S-0470
8	2.7	1.5	1.6	21055B-B-0470	21055B-S-0470
8	3.4	1.5	2.4	21055C-B-0470	21055C-S-0470
8	4.2	1.5	3.2	21055D-B-0470	21055D-S-0470
10	1.9	0.8	0.8	21057A-B-0470	21057A-S-0470
10	2.7	1.5	1.6	21057B-B-0470	21057B-S-0470
10	3.4	1.5	2.4	21057C-B-0470	21057C-S-0470
10	4.2	1.5	3.2	21057D-B-0470	21057D-S-0470
11	1.9	0.8	0.8	21058A-B-0470	21058A-S-0470
11	2.7	1.5	1.6	21058B-B-0470	21058B-S-0470
11	3.4	1.5	2.4	21058C-B-0470	21058C-S-0470
11	4.2	1.5	3.2	21058D-B-0470	21058D-S-0470

A LGTH (MM) ±.1	X Shank ±.1	B Knurl ±.1	T Board Thick.	BRASS (B) Thread M4 x 0.7	STEEL (S) Thread M4 x 0.7
13	1.9	0.8	0.8	21060A-B-0470	21060A-S-0470
13	2.7	1.5	1.6	21060B-B-0470	21060B-S-0470
13	3.4	1.5	2.4	21060C-B-0470	21060C-S-0470
13	4.2	1.5	3.2	21060D-B-0470	21060D-S-0470
14	1.9	0.8	0.8	21061A-B-0470	21061A-S-0470
14	2.7	1.5	1.6	21061B-B-0470	21061B-S-0470
14	3.4	1.5	2.4	21061C-B-0470	21061C-S-0470
14	4.2	1.5	3.2	21061D-B-0470	21061D-S-0470
16	1.9	0.8	0.8	21063A-B-0470	21063A-S-0470
16	2.7	1.5	1.6	21063B-B-0470	21063B-S-0470
16	3.4	1.5	2.4	21063C-B-0470	21063C-S-0470
16	4.2	1.5	3.2	21063D-B-0470	21063D-S-0470
19	1.9	0.8	0.8	21066A-B-0470	21066A-S-0470
19	2.7	1.5	1.6	21066B-B-0470	21066B-S-0470
19	3.4	1.5	2.4	21066C-B-0470	21066C-S-0470
19	4.2	1.5	3.2	21066D-B-0470	21066D-S-0470
22	1.9	0.8	0.8	21069A-B-0470	21069A-S-0470
22	2.7	1.5	1.6	21069B-B-0470	21069B-S-0470
22	3.4	1.5	2.4	21069C-B-0470	21069C-S-0470
22	4.2	1.5	3.2	21069D-B-0470	21069D-S-0470
25	1.9	0.8	0.8	21072A-B-0470	21072A-S-0470
25	2.7	1.5	1.6	21072B-B-0470	21072B-S-0470
25	3.4	1.5	2.4	21072C-B-0470	21072C-S-0470
25	4.2	1.5	3.2	21072D-B-0470	21072D-S-0470

5 Pasco Hill Road • Cromwell, CT 06416-1093
Phone: 860-828-0847 • Call Toll Free: 800-243-6032 • Fax: 860-828-0381
Web Address: http://www.amatom.com • E-Mail: sales@amatom.com

AMATOM®

10MM ROUND ANTI-ROTATION STANDOFFS

Dimensions and Tolerances	
Thread Size	M5.0 x 0.8
E	6.0MM ±.05
C	7.2MM +.10 −.05
D	10.0MM ±.13
H	6.9MM +.000 −.10

M5 x 0.8 THREAD

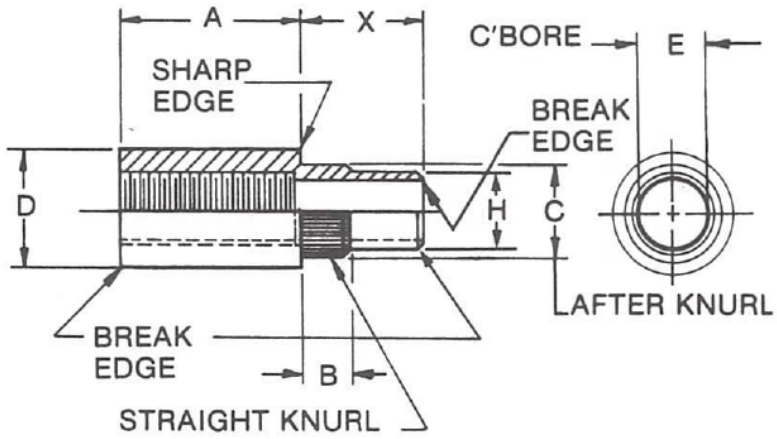

SWAGE TOOLING
Punch PSP 062-6

ANVIL	BODY LENGTH
PSA 190-1	3-5MM
2	6-11MM
3	13-16MM
4	19-25MM

A LGTH (MM) ±.1	X Shank ±.1	B Knurl ±.1	T Board Thick.	BRASS (B) Thread M5x0.8	STEEL (S) Thread M5x0.8
3	1.9	0.8	0.8	21075A-B-0580	21075A-S-0580
3	2.7	1.5	1.6	21075B-B-0580	21075B-S-0580
3	3.4	1.5	2.4	21075C-B-0580	21075C-S-0580
3	4.2	1.5	3.2	21075D-B-0580	21075D-S-0580
5	1.9	0.8	0.8	21077A-B-0580	21077A-S-0580
5	2.7	1.5	1.6	21077B-B-0580	21077B-S-0580
5	3.4	1.5	2.4	21077C-B-0580	21077C-S-0580
5	4.2	1.5	3.2	21077D-B-0580	21077D-S-0580
6	1.9	0.8	0.8	21078A-B-0580	21078A-S-0580
6	2.7	1.5	1.6	21078B-B-0580	21078B-S-0580
6	3.4	1.5	2.4	21078C-B-0580	21078C-S-0580
6	4.2	1.5	3.2	21078D-B-0580	21078D-S-0580
8	1.9	0.8	0.8	21080A-B-0580	21080A-S-0580
8	2.7	1.5	1.6	21080B-B-0580	21080B-S-0580
8	3.4	1.5	2.4	21080C-B-0580	21080C-S-0580
8	4.2	1.5	3.2	21080D-B-0580	21080D-S-0580
10	1.9	0.8	0.8	21082A-B-0580	21082A-S-0580
10	2.7	1.5	1.6	21082B-B-0580	21082B-S-0580
10	3.4	1.5	2.4	21082C-B-0580	21082C-S-0580
10	4.2	1.5	3.2	21082D-B-0580	21082D-S-0580
11	1.9	0.8	0.8	21083A-B-0580	21083A-S-0580
11	2.7	1.5	1.6	21083B-B-0580	21083B-S-0580
11	3.4	1.5	2.4	21083C-B-0580	21083C-S-0580
11	4.2	1.5	3.2	21083D-B-0580	21083D-S-0580

A LGTH (MM) ±.1	X Shank ±.1	B Knurl ±.1	T Board Thick.	BRASS (B) Thread M5x0.8	STEEL (S) Thread M5x0.8
13	1.9	0.8	0.8	21085A-B-0580	21085A-S-0580
13	2.7	1.5	1.6	21085B-B-0580	21085B-S-0580
13	3.4	1.5	2.4	21085C-B-0580	21085C-S-0580
13	4.2	1.5	3.2	21085D-B-0580	21085D-S-0580
14	1.9	0.8	0.8	21086A-B-0580	21086A-S-0580
14	2.7	1.5	1.6	21086B-B-0580	21086B-S-0580
14	3.4	1.5	2.4	21086C-B-0580	21086C-S-0580
14	4.2	1.5	3.2	21086D-B-0580	21086D-S-0580
16	1.9	0.8	0.8	21088A-B-0580	21088A-S-0580
16	2.7	1.5	1.6	21088B-B-0580	21088B-S-0580
16	3.4	1.5	2.4	21088C-B-0580	21088C-S-0580
16	4.2	1.5	3.2	21088D-B-0580	21088D-S-0580
19	1.9	0.8	0.8	21091A-B-0580	21091A-S-0580
19	2.7	1.5	1.6	21091B-B-0580	21091B-S-0580
19	3.4	1.5	2.4	21091C-B-0580	21091C-S-0580
19	4.2	1.5	3.2	21091D-B-0580	21091D-S-0580
22	1.9	0.8	0.8	21094A-B-0580	21094A-S-0580
22	2.7	1.5	1.6	21094B-B-0580	21094B-S-0580
22	3.4	1.5	2.4	21094C-B-0580	21094C-S-0580
22	4.2	1.5	3.2	21094D-B-0580	21094D-S-0580
25	1.9	0.8	0.8	21097A-B-0580	21097A-S-0580
25	2.7	1.5	1.6	21097B-B-0580	21097B-S-0580
25	3.4	1.5	2.4	21097C-B-0580	21097C-S-0580
25	4.2	1.5	3.2	21097D-B-0580	21097D-S-0580

5 Pasco Hill Road • Cromwell, CT 06416-1093
Phone: 860-828-0847 • Call Toll Free: 800-243-6032 • Fax: 860-828-0381
Web Address: http://www.amatom.com • E-Mail: sales@amatom.com

AMATOM®

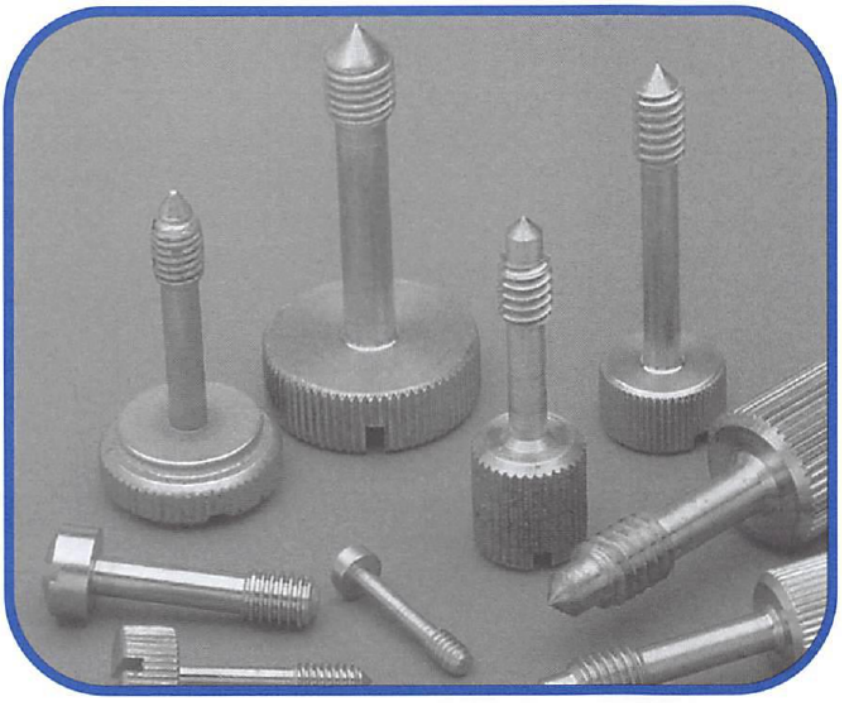

CAPTIVE PANEL HARDWARE

SCREWS - RETAINERS

ELECTRONIC HARDWARE
REFERENCE MANUAL

Call Toll Free
From anywhere in the USA Call Cromwell, CT **1-800-243-6032**

AMATOM ELECTRONIC HARDWARE
5 Pasco Hill Road
Cromwell, CT 06416-1093
860-828-0847
Fax: 860-828-0381
E-Mail: sales@amatom.com
Web Address: http://www.amatom.com

CAPTIVE PANEL HARDWARE

AMATOM®

Index Captive Panel Hardware

This Reference Manual has been compiled to make available to Engineers and Buyers in the Electronic Industry the most comprehensive listing of CAPTIVE PANEL HARDWARE that is AVAILABLE IN THE ELECTRONIC INDUSTRY.

NOTE 1 Any style captive screw or any style retainer must be purchased individually, thereby allowing the design section to obtain either or both parts of the assembly-**AS REQUIRED**.

NOTE 2 Variations in dimensions of any part may be obtained. Please consult AMATOM SALES OFFICE for price and delivery.

NOTE 3 Captive panel screws can be used with **ANY LISTED RETAINER** depending upon the individual's design preference (see note 4).

NOTE 4 Amatom can supply a variety of captive hardware according to MS drawings including the following captive screws: MS 17184; MS 25087; MS 51957; MS 90402.

This section of CAPTIVE PANEL SCREWS and CAPTIVE PANEL RETAINERS includes the following listed categories of types, styles, lengths, thread sizes and materials.

CAPTIVE PANEL SCREWS

	TYPE	PAGE	LENGTH	HEAD SIZES	THREAD	MATERIALS
	1	68-69	3/8" to 2"	5/16" to 5/8" dia.	4-40 to 5/16-24	Stainless steel and brass
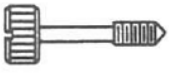	2A	70-71	21/32" to 29/32"	5/16" to 3/8" dia.	4-40 to 6-32	Stainless steel and brass
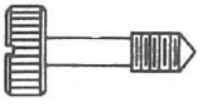	2B	71	15/16" to 1-3/8"	7/16" to 3/4" dia.	8-32 to 5/16-24	Stainless steel and brass
	3A	72-73	1/2" to 1"	5/16" dia.	4-40 to 6-32	Stainless steel and brass
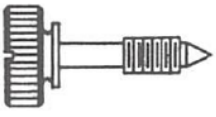	3B	73	3/4" to 1-7/16"	1/2" to 3/4" dia.	8-32 to 1/4-20	Stainless steel and brass

5 Pasco Hill Road • Cromwell, CT 06416-1093
Phone: 860-828-0847 • Call Toll Free: 800-243-6032 • Fax: 860-828-0381
Web Address: http://www.amatom.com • E-Mail: sales@amatom.com

AMATOM®

Index Captive Panel Hardware

LENGTH	HEAD SIZES	THREAD	MATERIALS	PAGE	TYPE	
3/8" to 1-1/2"	7/32" to 3/8" dia.	4-40 to 10-32	Stainless steel and brass	74-75	4	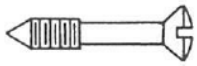
1/4" to 1-1/4"	1/8" to 5/16" dia.	2-56 to 10-32	Stainless steel and brass	78-79	5	
15/32" to 29/32"	1/4" to 3/8" dia.	4-40 to 10-32	Stainless steel	77	6	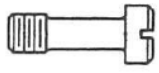
9/32" to 1-3/4"	1/4" to 3/8" dia.	4-40 to 10-32	Aluminum Brass Stainless steel	77	7	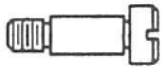

CAPTIVE PANEL WASHER

BR-AL-SS-N

Anti-rotating countersunk washer used with type 4 captive screw or any other countersunk head screw to secure front plate of panel without damaging finish after repeated use.

74-75 4



CAPTIVE PANEL RETAINERS

SHANK LENGTH	DIAMETER	HGT. FROM PANEL	THREAD SIZES	MATERIALS	PAGE	TYPE	
.050, .080, .125, .188 .250	1/4" to 7/8"	.124" to .482"	4-40 to 3/8-16	Stainless steel and brass	80-81	Screw 1	
.062, .093, .125, .187, .250	1/4" to 1/2"	.250" to .500"	4-40 to 1/4-28	Stainless steel and brass	82-83	Screw 2A	
.062, .093, .125, .187, .250	5/16" to 1/2"	.312" to .563"	4-40 to 1/4-28	Stainless steel and brass	84-85	Screw Spring 2B	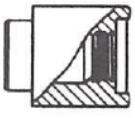

5 Pasco Hill Road • Cromwell, CT 06416-1093
Phone: 860-828-0847 • Call Toll Free: 800-243-6032 • Fax: 860-828-0381
Web Address: http://www.amatom.com • E-Mail: sales@amatom.com

AMATOM®

Index Captive Panel Hardware

	TYPE	PAGE	SHANK LENGTH	DIAMETER	HGT. FR. PANEL	THREAD SIZES	MATERIALS
	Retainer 2C	86-87	.062, .093, .125, .187, .250	1/4" to 1/2"	.218" to .438"	4-40 to 1/4-28	Stainless steel and brass
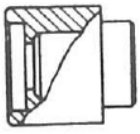	Spring Retainer 2D	88-89	.062, .093, .125, .187, .250	5/16" to 1/2"	.281" to .531"	4-40 to 1/4-28	Stainless steel and brass
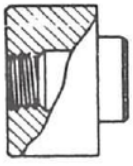	Screw 3	90-91	.062, .093, .125, .187, .250	1/4" to 1/2"	.125" to .375"	4-40 to 5/16-24	Stainless steel and brass
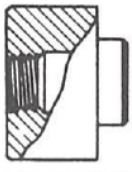	Screw 3A	92	.165, .230 .290	9/16"	.312"	6-32 to 1/4-20	Stainless steel and brass

The dimensions as listed in this manual are functional. Amatom's hardware is inspected Per MIL-STD-105 during production and rechecked before shipment.

Amatom reserves the right to make adjustments in dimensions and specifications at any time without notice. Customer's inspection should be determined primarily on functionality.

5 Pasco Hill Road • Cromwell, CT 06416-1093
Phone: 860-828-0847 • Call Toll Free: 800-243-6032 • Fax: 860-828-0381
Web Address: http://www.amatom.com • E-Mail: sales@amatom.com

AMATOM®

Part Number Code and Specifications

PLEASE READ THIS CAREFULLY

SCREWS - EXPLANATION OF AMATOM PART NUMBERS

61XX – B – 0440 – 4

- **61XX** — This number indicates the style and length of the screw. The number for each different length in any one style is the same for all head sizes.† (Head size is determined by thread size unless otherwise specified as in Note 3 below.) †Except type 2.
- **B** — This letter indicates the material from which part is made. (See chart A, page 66.)
- **0440** — This number designates the thread size. Thread size determines all dimensions of screw, except length, unless otherwise specified. (See Chart B, page 66.)
- **4** — This number designates the finish of the part. Customer must add this number. (See Chart C, page 66.)

Notes: 1. Standard finishes are stocked as listed under each type. If other than standard finishes are required, see Chart C page 66.
2. For screws with unslotted heads, add the letter U after the first four digits as follows - 61XXU.

SPECIAL SIZES:

For parts not listed in this catalog, please send a print to Amatom's Sales Office. Some typical modifications include:
- Different Length, Dimension "L".
- Different Combinations of Head Sizes and Thread Sizes.

RETAINERS - EXPLANATION OF AMATOM PART NUMBERS

62XX – A – B – 0440 – 4

- **62XX** — This number indicates the style and size of the retainer (see tables.)
- **A** — This letter designates the shank length (see tables.)
- **B** — This letter indicates the material from which part is made (see Chart A.)
- **0440** — This number designates the thread size of the screw used with the retainer (see Chart B.)
- **4** — This number designates the finish of the part. Customer must add this number. (See note below.)

Notes: 1. Standard finishes stocked are as listed under each type. If other than standard finishes are required, see Chart C page 66.
2. For special shank lengths contact Amatom Sales Office.

SHANK LENGTH - RETAINERS
The same system has been followed with the addition of letters "A" through "E" added to the number designating the length of the shank - as follows:

Note: For special shank lengths contact Sales Office.

TABLE 15
Type 1
CODE FOR SHANK LENGTH (A DIM.)

CODE	LENGTH OF SHANK	PANEL THICKNESS
A	.050	.048-.072
B	.080	.074-.109
C	.125	.119-.156
D	.188	.188
E	.250	.250

TABLE 17
Type 2A-B-C-D Type 3
CODE FOR SHANK LENGTH (A DIM.)

CODE	LENGTH OF SHANK	PANEL THICKNESS
A	.062	.052-.067
B	.093	.084-.099
C	.125	.109-.140
D	.187	.171-.203
E	.250	.234-.265

TABLE 26
Type 3A
CODE FOR SHANK LENGTH (A DIM.)

CODE	LENGTH OF SHANK	PANEL THICKNESS
A	–	.052-.067
B	–	.084-.099
C	.165	.109-.140
D	.230	.171-.203
E	.290	.234-.265

5 Pasco Hill Road • Cromwell, CT 06416-1093
Phone: 860-828-0847 • Call Toll Free: 800-243-6032 • Fax: 860-828-0381
Web Address: http://www.amatom.com • E-Mail: sales@amatom.com

AMATOM®

Part Number Code and Specifications

Tolerances as specified in tables, otherwise standard tolerances as follows:
Decimals ±.005 Fractions ±1/64" Angles ± 5°

MATERIALS
CHART A

MATERIAL	CODE LETTER	MATERIAL SPECIFICATIONS
Brass	B	Alloy 360, 353 ASTM B16
Aluminum	A	[1]QQ-A-225/3 (2011-T3) QQ-A-200/8 QQ-A-225/6 (2024-T4) QQ-A-225/8 (6061-T6) QQ-A-200/9 (6063-T5)
Stainless Steel	SS	ASTM A 582
Steel	S	QQ-S-637
Nylon	N	[2]LP-410

Notes: 1. Depending upon application.
2. Smallest thread size recommended is 4-40.

THREAD CODE

Per handbook H-28 (Part 1)
Screw Thread Standards (Federal)

Thread code is the 4 digit number assigned to the part number to designate the thread size of the part. All threads are Class 2A and 2B (commercial).

CHART B

Thread Size	AMATOM Thread Code	Thread Size	AMATOM Thread Code	Thread Size	AMATOM Thread Code
0-80	**0080**	5-44	**0544**	1/4-32	**2532**
1-64	**0164**	6-32	**0632**	5/16-18	**3118**
1-72	**0172**	6-40	**0640**	5/16-24	**3124**
2-56	**0256**	8-32	**0832**	3/8-16	**3716**
2-64	**0264**	8-36	**0836**	3/8-24	**3724**
3-48	**0348**	10-24	**1024**	3/8-32	**3732**
3-56	**0356**	10-32	**1032**	7/16-14	**4314**
4-40	**0440**	12-24	**1224**	7/16-20	**4320**
4-48	**0448**	1/4-20	**2520**	1/2-13	**5013**
5-40	**0540**	1/4-28	**2528**	1/2-20	**5020**

Note: For special threads, contact Sales Office for number.

FINISHES AVAILABLE
CHART C

0	No Finish
3	Cadmium Plate-QQ-P-416 Class 3, Clear Chromate Special Order
3B	Cadmium Plate-QQ-P-416 Class 3, Type 2 - Color Chromate Special Order
4	Nickel Plate-QQ-N-290, Grade G
6A	Brass Ebonal "C"-Mil-F-495
6B	Stainless Steel "Black Oxide"-Mil-C-13924
7	Passivate-QQ-P-3-35
14	Electro Tin Plate-Mil-T-10727-Type 1
14A	Electro Tin Solder 60/40 per M230 Mil-F-14072
28	Zinc Plate .0002 thick ASTM-B-633 Type 1
29	Solder Plate 0.0003-0.001 thick Solder per QQ-S-571, Sn60 over Nickel Plate 0.0001-0.0005
37	Zinc Plate .0002 thick ASTM-B-633 Type 2 - Color Chromate

5 Pasco Hill Road • Cromwell, CT 06416-1093
Phone: 860-828-0847 • Call Toll Free: 800-243-6032 • Fax: 860-828-0381
Web Address: http://www.amatom.com • E-Mail: sales@amatom.com

AMATOM®

Index Captive Panel Hardware

The following types of panel retainers were designed with specific captive screws in mind - but can be used interchangably according to your individual requirements.

CAPTIVE PANEL SCREWS	CAPTIVE PANEL RETAINERS
Type 1	Type 1
Type 2A	Type 2A, 2B 2C, 2D
Type 2B	Type 2A, 2B 2C, 2D
Type 3A, 3B	Type 3,3A

Type 1
Page 68-69

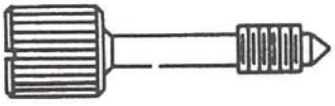



Screw Type 1
Page 80-81

TYPE 2A & 2B
Page 70-71

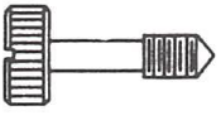



Screw Type 2A
Page 82-83



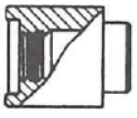

Screw-Spring Type 2B
Page 84-85

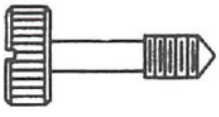



Retainer Type 2C
Page 86-87



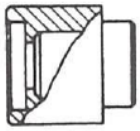

Spring-Retainer Type 2D
Page 88-89

Type 3A & 3B
Page 72-73

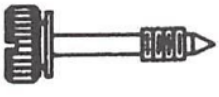

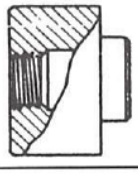

Screw Type 3 & 3A
Page 90-92

Type 4
Page 75

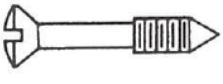



Washer Type 4
Page 74-75

5 Pasco Hill Road • Cromwell, CT 06416-1093
Phone: 860-828-0847 • Call Toll Free: 800-243-6032 • Fax: 860-828-0381
Web Address: http://www.amatom.com • E-Mail: sales@amatom.com

CAPTIVE PANEL SCREWS

(PANEL SCREW - EXTERNALLY RELIEVED BODY) Per FSC-5305-120

Type 1: For captive panel retainers used with these screws see pages 80 and 81.

Material
- SS-Corrosive Resisting Steel (Stainless Steel): ASTM A581-75 thru 1/2 O.D. over 1/2 AMS-5762.
- B-Brass: QQ-B-626 Comp 22 1/2 Hard.
- NOTE: Available in other materials on special order - Price on Application.

Standard Finish
- For Corrosive Resisting Steel (SS):
- Amatom Finish No. 7 - Passivate per cres QQ-P-35.
- For Brass (B): Amatom Finish No. 4 - Nickel plate - QQ-N-290 Grade G.

Head
- Brushed and Polished Heads - Available on special order only.

Threads
- UNC-2A and UNF-2A per National Bureau of Standards Handbook H28 titled "Screw-Thread Standards for Federal Services."

Workmanship
- To high precision standards.

Quality Control
- To MIL-STD-105. Made for use on government equipment.

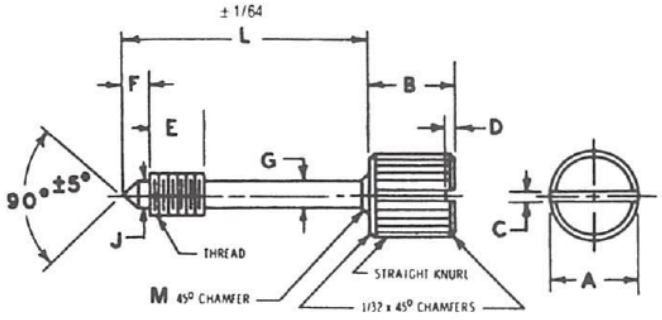

Type 1. (Refer to Table 1 and 2)

Notes:
- Any similar type captive screw in any increment of body or thread length is available on special order. Price on application.
- Parts normally stocked slotted. Unslotted available on order. Price on application.
- The stainless steel captive screws are made to MIL-E-16400 (ships).
- Available "Burr Free" for ultra precision parts. Price on application.

"A" is the dimension of the head before knurling.

TABLE 1 - Screw Dimensions

For Part No. of Lengths refer to Table 2 under Required Thread Size and Material

THREAD	MATERIAL		A	B	C	D	E	F	G	J	KNURL	M
	BRASS	STAIN-LESS STEEL	±.005	±1/64	±.005	+.010 -.005	±.015	REF.	±.005	+.000 -.016	TEETH PER INCH	CHAMFER 45º MAX.
4-40 UNC-2A	B	SS	5/16	5/16	.047	.078	.125	5/64	.078	.078	40	.022
6-32 UNC-2A	B	SS	5/16	5/16	.047	.078	.212	3/32	.095	.095	40	.022
8-32 UNC-2A	B	SS	5/16	5/16	.047	.078	.212	3/32	.120	.120	40	.022
10-24 UNC-2A	B	SS	3/8	7/16	.063	.094	.250	5/32	.130	.130	40	.030
10-32 UNF-2A	B	SS	3/8	7/16	.063	.094	.250	5/32	.130	.130	40	.030
1/4-20 UNC-2A	B	SS	1/2	9/16	.078	.094	.313	3/16	.175	.175	30	.038
1/4-28 UNF-2A	B	SS	1/2	9/16	.078	.094	.313	3/16	.175	.175	30	.038
5/16-18 UNC-2A	B	SS	5/8	11/16	.094	.125	.375	1/4	.230	.230	30	.041
5/16-24 UNF-2A	–	SS	5/8	11/16	.094	.125	.375	1/4	.230	.230	30	.041

5 Pasco Hill Road • Cromwell, CT 06416-1093
Phone: 860-828-0847 • Call Toll Free: 800-243-6032 • Fax: 860-828-0381
Web Address: http://www.amatom.com • E-Mail: sales@amatom.com

CAPTIVE PANEL SCREWS

(PANEL SCREW - EXTERNALLY RELIEVED BODY) Per FSC-5305-120

TABLE 2 - Type 1

For all dimensions other than length refer to Table 1 (page 68)

Length	Part No.	Threads								
		4-40	6-32	8-32	10-24	10-32	1/4-20	1/4-28	5/16-18	5/16-24
3/8	**6100**	4-40	6-32							
7/16	**6101**	4-40	6-32							
1/2	**6102**	4-40	6-32	8-32						
9/16	**6103**	4-40	6-32	8-32						
5/8	**6104**	4-40	6-32	8-32	10-24	10-32	1/4-20			
11/16	**6105**	4-40	6-32	8-32	10-24	10-32	1/4-20			
3/4	**6106**	4-40	6-32	8-32	10-24	10-32	1/4-20	1/4-28		
13/16	**6107**	4-40	6-32	8-32	10-24	10-32	1/4-20	1/4-28		
7/8	**6108**	4-40	6-32	8-32	10-24	10-32	1/4-20	1/4-28		
15/16	**6109**	4-40	6-32	8-32	10-24	10-32	1/4-20	1/4-28		
1	**6110**	4-40	6-32	8-32	10-24	10-32	1/4-20	1/4-28	5/16-18	5/16-24
1-1/16	**6111**	4-40	6-32	8-32	10-24	10-32	1/4-20	1/4-28	5/16-18	5/16-24
1-1/8	**6112**	4-40	6-32	8-32	10-24	10-32	1/4-20	1/4-28	5/16-18	5/16-24
1-3/16	**6113**	4-40	6-32	8-32	10-24	10-32	1/4-20	1/4-28	5/16-18	5/16-24
1-1/4	**6114**	4-40	6-32	8-32	10-24	10-32	1/4-20	1/4-28	5/16-18	5/16-24
1-5/16	**6115**	4-40	6-32	8-32	10-24	10-32	1/4-20	1/4-28	5/16-18	5/16-24
1-3/8	**6116**	4-40	6-32	8-32	10-24	10-32	1/4-20	1/4-28	5/16-18	5/16-24
1-1/2	**6117**	4-40	6-32	8-32	10-24	10-32	1/4-20	1/4-28	5/16-18	5/16-24
1-3/4	**6118**	4-40	6-32	8-32	10-24	10-32	1/4-20	1/4-28	5/16-18	5/16-24
2	**6119**	4-40	6-32	8-32	10-24	10-32	1/4-20	1/4-28	5/16-18	5/16-24

Other lengths and threads available on special order, contact sales office.

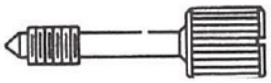

Type 1

TOLERANCES as specified in tables.
Otherwise standard tolerances as follows:
Decimals ±.005; Fractions ±1/64; Angles ± 5º.

PART NO. indicates the style and length of the screw. The number for each different length in any one style is the same for all head sizes.

PART NUMBER ORDERING SYSTEM

XXXX - X - XXXX - XX

PART NO. | THREAD | MATERIAL | FINISH

Per handbook H-28 (Part 1) Screw Thread Standards (Federal). All threads are Class 2A and 2B (commercial).

Refer To Page 66 For Finish Codes.

CHART A - Materials	
MATERIAL	CODE LETTER
BRASS	B
STEEL	S
STAINLESS STEEL	SS

THREAD CODE	
THREAD	CODE
4-40	0440
6-32	0632
8-32	0832
10-24	1024
10-32	1032
1/4-20	2520
1/4-28	2528
5/16-18	3118
5/16-24	3124

5 Pasco Hill Road • Cromwell, CT 06416-1093
Phone: 860-828-0847 • Call Toll Free: 800-243-6032 • Fax: 860-828-0381
Web Address: http://www.amatom.com • E-Mail: sales@amatom.com

CAPTIVE PANEL SCREWS

(PANEL SCREW - EXTERNALLY RELIEVED BODY) Per FSC-5305-120

Type 2: For captive panel retainers used with these screws see pages 82 through 89.

Material
- SS-Corrosive Resisting Steel (Stainless Steel): ASTM A581-75 thru 1/2 O.D. over 1/2 AMS-5762.
- B-Brass: QQ-B-626 Comp 22 1/2 Hard.
- NOTE: Available in other materials on special order - Price on Application.

Standard Finish
- For Corrosive Resisting Steel (SS): Amatom Finish No. 7 - Passivate per cres QQ-P-35
- For Brass (B): Amatom Finish No. 4 - Nickel plate-QQ-N-290 Grade G.

Head
- Polished Head - Standard
  Brushed Heads - Available on special order only.

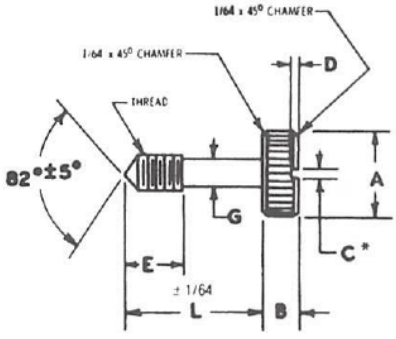

TYPE 2B-STANDARD
(Refer to Table 3, 5 and 6)

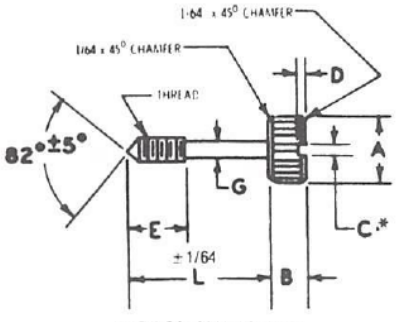

TYPE 2A-MINIATURE
(Refer to Table 3 and 4)

Notes:
- Any similar type captive screw in any increment of body or thread length is available on special order. Price on application.
- Parts normally stocked slotted. Unslotted available on order. Price on application.
- The stainless steel captive screws are made to MIL-E-16400 (ships).
- Available "Burr Free" for ultra precision parts. Price on application.

"A" is the dimension of the head before knurling.

TABLE 3 - Type 2 Screw Dimensions

For Part No. of Lengths refer to Table 4,5,6 under Required Thread Size and Material.

TYPE	THREAD	MATERIAL: BRASS	MATERIAL: STAINLESS STEEL	A ±.005	B ±1/64	C ±.005	D +.010 -.005	E ±1/64	G ±.005	TEETH PER INCH
2A	4-40 UNC-2A	B	SS	5/16	3/16	.047	.063	9/32	.078	40
2A	6-32 UNC-2A	B	SS	5/16	3/16	.047	.063	9/32	.095	40
2A	6-32 UNC-2A	B	SS	3/8	3/16	.047	.063	9/32	.095	40
2B	8-32 UNC-2A	B	SS	7/16	1/4	.063	.063	3/8	.120	40
2B	10-24 UNC-2A	B	SS	7/16	1/4	.063	.063	3/8	.130	40
2B	10-32 UNF-2A	B	SS	7/16	1/4	.063	.063	3/8	.130	40
2B	12-24 UNC-2A	B	SS	9/16	1/4	.063	.094	3/8	.152	30
2B	1/4-20 UNC-2A	B	SS	9/16	1/4	.063	.094	3/8	.175	30
2B	1/4-20 UNC-2A	B	SS	3/4	1/4	.063	.125	3/8	.175	30
2B	1/4-28 UNF-2A	B	SS	9/16	1/4	.063	.094	3/8	.175	30
2B	1/4-28 UNF-2A	B	SS	3/4	1/4	.063	.125	3/8	.175	30
2B	5/16-24 UNF-2A	–	SS	9/16	1/4	.063	.094	3/8	.235	30

5 Pasco Hill Road • Cromwell, CT 06416-1093
Phone: 860-828-0847 • Call Toll Free: 800-243-6032 • Fax: 860-828-0381
Web Address: http://www.amatom.com • E-Mail: sales@amatom.com

AMATOM®

CAPTIVE PANEL SCREWS

(PANEL SCREW - EXTERNALLY RELIEVED BODY) Per FSC-5305-120

TABLE 4 - Type 2A - Miniature*

Length	Part No.	Thread		Head Diameter
		4-40	6-32	
21/32	6130	4-40	6-32	5/16
21/32	6135		6-32	3/8
23/32	6131	4-40	6-32	5/16
23/32	6136		6-32	3/8
25/32	6132	4-40	6-32	5/16
25/32	6137		6-32	3/8
27/32	6133	4-40	6-32	5/16
27/32	6138		6-32	3/8
29/32	6134	4-40	6-32	5/16
29/32	6139		6-32	3/8

TABLE 5 - Type 2B - Standard*

Length	Part No.	Thread				Head Diameter
		8-32	10-24	10-32	12-24	
15/16	6140	8-32	10-24	10-32		7/16
15/16	6148				12-24	9/16
1"	6141	8-32	10-24	10-32		7/16
1"	6149				12-24	9/16
1-1/16	6142	8-32	10-24	10-32		7/16
1-1/16	6150				12-24	9/16
1-1/8	6143	8-32	10-24	10-32		7/16
1-1/8	6151				12-24	9/16
1-3/16	6144	8-32	10-24	10-32		7/16
1-3/16	6152				12-24	9/16
1-1/4	6145	8-32	10-24	10-32		7/16
1-1/4	6153				12-24	9/16
1-5/16	6146	8-32	10-24	10-32		7/16
1-5/16	6154				12-24	9/16
1-3/8	6147	8-32	10-24	10-32		7/16
1-3/8	6155				12-24	9/16

For all dimensions other than length refer to Table 1 (page 68)
*See page 62, Note 1 and Note 4.

TOLERANCES as specified in tables. Otherwise standard tolerances as follows: Decimals ±.005; Fractions ±1/64; Angles ± 5º.

**Table 6, 5/16-24 available in SS only.

Note: Other lengths available on special order.

Per handbook H-28 (Part 1) Screw Thread Standards (Federal). All threads are Class 2A and 2B (commercial).

For special threads or parts not listed contact sales office.

TABLE 6 - Type 2B - Standard*

Length	Part No.	Thread			Head Diameter
		1/4-20	1/4-28	5/16-24	
15/16	6148	1/4-20	1/4-28	5/16-24**	9/16
15/16	6156	1/4-20	1/4-28		3/4
1"	6149	1/4-20	1/4-28	5/16-24**	9/16
1"	6157	1/4-20	1/4-28		3/4
1-1/16	6150	1/4-20	1/4-28	5/16-24**	9/16
1-1/16	6158	1/4-20	1/4-28		3/4
1-1/8	6151	1/4-20	1/4-28	5/16-24**	9/16
1-1/8	6159	1/4-20	1/4-28		3/4
1-3/16	6152	1/4-20	1/4-28	5/16-24**	9/16
1-3/16	6160	1/4-20	1/4-28		3/4
1-1/4	6153	1/4-20	1/4-28	5/16-24**	9/16
1-1/4	6161	1/4-20	1/4-28		3/4
1-5/16	6154	1/4-20	1/4-28	5/16-24**	9/16
1-5/16	6162	1/4-20	1/4-28		3/4
1-3/8	6155	1/4-20	1/4-28	5/16-24**	9/16
1-3/8	6163	1/4-20	1/4-28		3/4

PART NO. indicates the style and length of the screw. The number for each different length in any one style is the same for all head sizes. **Unless ordered with a "U", ships slotted.**

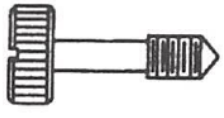

THREAD CODE	
THREAD	CODE
4-40	0440
6-32	0632
8-32	0832
10-24	1024
10-32	1032
12-24	1224
1/4-20	2520
1/4-28	2528
5/16-24	3124

PART NUMBER ORDERING SYSTEM

XXXX - X - XXXX - XX

PART NO. | THREAD | MATERIAL | FINISH

Refer To Page 66 For Finish Codes.

CHART A - Materials	
MATERIAL	CODE LETTER
BRASS	B
STEEL	S
STAINLESS STEEL	SS

5 Pasco Hill Road • Cromwell, CT 06416-1093
Phone: 860-828-0847 • Call Toll Free: 800-243-6032 • Fax: 860-828-0381
Web Address: http://www.amatom.com • E-Mail: sales@amatom.com

CAPTIVE PANEL SCREWS

(PANEL SCREW - EXTERNALLY RELIEVED BODY) Per FSC-5305-120

Type 3: For captive panel retainers used with these screws see page 90 through page 92.

Material
- SS-Corrosive Resisting Steel (Stainless Steel): ASTM A581-75 thru 1/2 O.D. over 1/2 AMS-5762.
- B-Brass: QQ-B-626 Comp 22 1/2 Hard.
- NOTE: Available in other materials on special order - Price on application.

Standard Finish
- For Corrosive Resisting Steel (SS):
- Amatom Finish No. 7 - Passivate per cres QQ-P-35.
- For Brass (B): Amatom Finish No. 4 - Nickel plate-QQ-N-290 Grade G.

Head
- Brushed and Polished Heads - Available on special order only.

Threads
- UNC-2A and IMF-2A per National Bureau of Standards Handbook H28 titled "Screw-Thread Standards for Federal Services."

Workmanship
- To high precision standards.

Quality Control
- To MIL-STD-105. Made for use on government equipment.

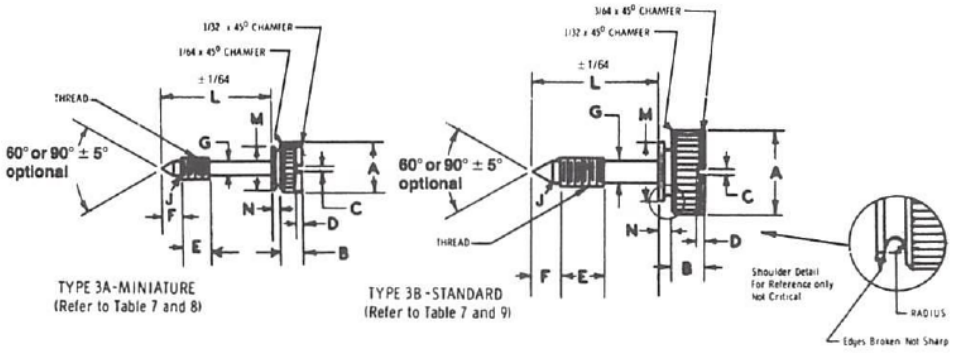

"A" is the dimension of the head before knurling.

Notes:
- Any similar type captive screw in any increment of body or thread length is available on special order. Price on application.
- Parts normally stocked slotted. Unslotted available on order. Price on application.
- The stainless steel captive screws are made to MIL-E-16400 (ships).
- Available "Burr Free" for ultra precision parts. Price on application.

TABLE 7 - Type 3 - Screw Dimensions

For Part No. of Lengths refer to Table 8 and 9 under Required Thread Sizes and Materials.

TYPE	THREAD	MATERIAL: BRASS	MATERIAL: STAINLESS STEEL	A ±.005	B ±1/64	C ±.005	D +.010 −.005	E ±1/64	F ±1/64	G ±.005	J +.000 −.016	M ±.010	N ±.010	TEETH PER INCH
3A	4-40 UNC-2A	B	SS	5/16	1/8	.047	.078	3/16	1/8	.078	.078	13/64	1/16	40
3A	6-32 UNC-2A	B	SS	5/16	1/8	.047	.078	3/16	1/8	.095	.095	13/64	1/16	40
3B	8-32 UNC-2A	B	SS	1/2	3/16	.047	.078	1/4	1/8	.120	.120	13/32	1/16	40
3B	8-32 UNC-2A	B	SS	5/8	3/16	.047	.078	1/4	1/8	.120	.120	1/2	1/16	40
3B	10-32 UNF-2A	B	SS	1/2	3/16	.063	.094	1/4	1/8	.130	.130	13/32	1/16	30
3B	10-32 UNF-2A	B	SS	5/8	3/16	.063	.094	1/4	1/8	.130	.130	1/2	1/16	30
3B	12-24 UNC-2A	B	SS	5/8	3/16	.063	.094	1/4	1/8	.152	.152	1/2	1/16	30
3B	1/4-20 UNC-2A	B	SS	5/8	3/16	.078	.094	1/4	1/8	.175	.175	1/2	1/16	30
3B	1/4-20 UNC-2A	B	SS	3/4	1/4	.078	.094	3/8	1/4	.175	.175	1/2	1/8	30

5 Pasco Hill Road • Cromwell, CT 06416-1093
Phone: 860-828-0847 • Call Toll Free: 800-243-6032 • Fax: 860-828-0381
Web Address: http://www.amatom.com • E-Mail: sales@amatom.com

AMATOM®

CAPTIVE PANEL SCREWS

(PANEL SCREW - EXTERNALLY RELIEVED BODY) Per FSC-5305-120

TABLE 8 - Type 3A and 3B

Length	Part No.	Thread	Head Diameter	Type
1/2	**6170**	4-40, 6-32	5/16	3A
9/16	**6171**	4-40, 6-32	5/16	3A
5/8	**6172**	4-40, 6-32	5/16	3A
11/16	**6173**	4-40, 6-32	5/16	3A
3/4	**6174**	4-40, 6-32	5/16	3A
3/4	**6179**	8-32	1/2	3B
3/4	**6189**	8-32	5/8	3B
13/16	**6175**	4-40, 6-32	5/16	3A
13/16	**6180**	8-32	1/2	3B
13/16	**6190**	8-32	5/8	3B
7/8	**6176**	4-40, 6-32	5/16	3A
7/8	**6181**	8-32	1/2	3B
7/8	**6191**	8-32	5/8	3B
15/16	**6177**	4-40, 6-32	5/16	3A
15/16	**6182**	8-32	1/2	3B
15/16	**6192**	8-32	5/8	3B
1"	**6178**	4-40, 6-32	5/16	3A
1"	**6183**	8-32	1/2	3B
1"	**6193**	8-32	5/8	3B
1-1/16	**6184**	8-32	1/2	3B
1-1/16	**6194**	8-32	5/8	3B
1-1/8	**6185**	8-32	1/2	3B
1-1/8	**6195**	8-32	5/8	3B
1-3/16	**6186**	8-32	1/2	3B
1-3/16	**6196**	8-32	5/8	3B
1-1/4	**6187**	8-32	1/2	3B
1-1/4	**6197**	8-32	5/8	3B

TABLE 9 - Type 3B Standard

Length	Part No.	Thread	Head Diameter
7/8	**6181**	10-32	1/2
7/8	**6191**	10-32	5/8
15/16	**6182**	10-32	1/2
15/16	**6192**	10-32,12-24, 1/4-20	5/8
15/16	**6199**	1/4-20	3/4
1"	**6183**	10-32	1/2
1"	**6193**	10-32, 12-24, 1/4-20	5/8
1"	**6200**	1/4-20	3/4
1-1/16	**6184**	10-32	1/2
1-1/16	**6194**	10-32, 12-24, 1/4-20	5/8
1-1/16	**6201**	1/4-20	3/4
1-1/8	**6185**	10-32	1/2
1-1/8	**6195**	10-32, 12-24, 1/4-20	5/8
1-1/8	**6202**	1/4-20	3/4
1-3/16	**6186**	10-32	1/2
1-3/16	**6196**	10-32, 12-24, 1/4-20	5/8
1-3/16	**6203**	1/4-20	3/4
1-1/4	**6187**	10-32	1/2
1-1/4	**6197**	10-32, 12-24, 1/4-20	5/8
1-1/4	**6204**	1/4-20	3/4
1-5/16	**6188**	10-32	1/2
1-5/16	**6198**	10-32, 12-24, 1/4-20	5/8
1-5/16	**6205**	1/4-20	3/4
1-3/8	**6206**	1/4-20	3/4
1-7/16	**6207**	1/4-20	3/4



For all dimensions other than length refer to Table 7 (page 72)

See page 65 to specify part numbers not listed in Table.

PART NUMBER ORDERING SYSTEM

XXXX - X - XXXX - XX

PART NO. | THREAD | MATERIAL | FINISH

Refer to page 66 for Finish Codes.

For special threads or parts not listed contact sales office.

CHART A - Materials

MATERIAL	CODE LETTER
BRASS	**B**
STEEL	**S**
STAINLESS STEEL	**SS**

THREAD CODE

THREAD	CODE
4-40	**0440**
6-32	**0632**
8-32	**0832**
10-32	**1032**
12-24	**1224**
1/4-20	**2520**

5 Pasco Hill Road • Cromwell, CT 06416-1093
Phone: 860-828-0847 • Call Toll Free: 800-243-6032 • Fax: 860-828-0381
Web Address: http://www.amatom.com • E-Mail: sales@amatom.com

PANEL SCREWS / WASHER

USED WITH OVAL HEAD CAPTIVE PANEL SCREW (TYPE 4)

- This captive washer allows the attaching screw to be screwed down and removed many times without damaging finish of front panel.

  ONLY THE SCREW TURNS – NOT THE WASHER
- Combination of finishes. Washer and screw available for decorative design use.
- Available in: Brass-Nickel Plated, Stainless Steel, Aluminum–Plain or anodized (on special order), Nylon or Plastic.

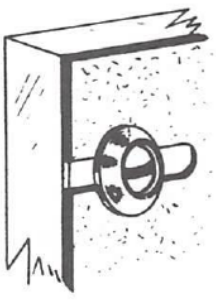

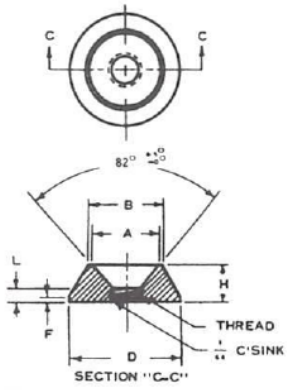

Refer to Table 28 for Dimensions

TABLE 28

Dimensions of Washer and Part Numbers by Thread Sizes

PART NO.	Thread Size	A ±.004	B ±.002	D ±.003	F ±.005	H +.005 −.000	L ±.016
6700	4-40	.235	.267	.375	.020	.145	.062
6701	6-32	.289	.321	.437	.025	.161	.070
6702	8-32	.342	.380	.560	.032	.193	.070
6703	10-24	.395	.427	.625	.032	.209	.078
6704	10-32	.395	.427	.625	.032	.209	.078

Refer To Page 66 For Finish Codes.

PART NUMBER ORDERING SYSTEM

XXXX - X - XXXX - XX

PART NO. | THREAD | MATERIAL | FINISH

CHART A - Materials	
MATERIAL	CODE LETTER
ALUMINUM	A
BRASS	B
STEEL	S
STAINLESS STEEL	SS
NYLON	N

THREAD CODE	
THREAD	CODE
4-40	0440
6-32	0632
8-32	0832
10-24	1024
10-32	1032

5 Pasco Hill Road • Cromwell, CT 06416-1093
Phone: 860-828-0847 • Call Toll Free: 800-243-6032 • Fax: 860-828-0381
Web Address: http://www.amatom.com • E-Mail: sales@amatom.com

PANEL SCREWS / WASHER

TYPE 4: OVAL HEAD PANEL SCREW

Notes:
- Any similar type captive screw in any increment of body or thread length is available on special order. Price on application.
- The stainless steel captive screws are made to MIL-E-16400 (ships).
- Available "Burr Free" for ultra precision parts. Price on application.

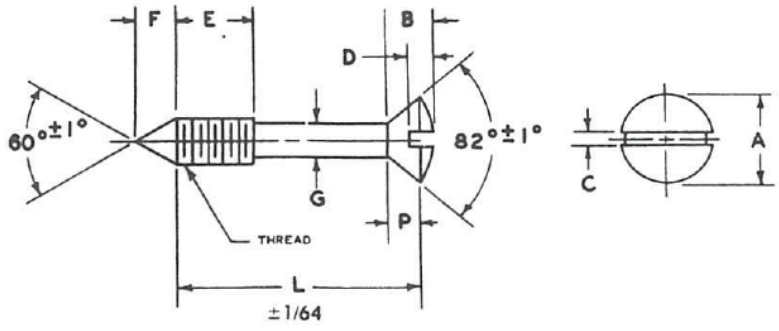

TABLE 10 - Type 4 - Screw Dimensions

For Part No. of Lengths refer to Table 11 under Required Thread Size and Material.

MATERIAL			A	B	C	D	E	F	G	P
THREAD	BRASS	STAIN-LESS STEEL	±.010	±.010	±.005	+.010 −.005	±1/64	±.015	±.005	+.020 −.000
4-40 UNC-2A	B	SS	.216	.094	.035	.049	3/16	.096	.078	.067
6-32 UNC-2A	B	SS	.268	.117	.044	.062	1/4	.121	.095	.083
8-32 UNC-2A	B	SS	320	.139	.050	.075	1/4	.142	.120	.100
10-24 UNC-2A	B	SS	.372	.162	.055	.089	1/4	.164	.130	.116
10-32 UNF-2A	B	SS	.372	.162	.055	.089	1/4	.164	.130	.116

(PANEL SCREW - EXTERNALLY RELIEVED BODY) Per RSC-5305-120

TABLE 11 - Type 4

For all Dimensions other than Length Refer to Table 10.

LENGTH	PART NO.
3/8*	6210
7/16*	6211
1/2*	6212
9/16*	6213
5/8	6214
11/16	6215

*Only in 4-40, 6-32, 8-32.

LENGTH	PART NO.
3/4	6216
13/16	6217
7/8	6218
15/16	6219
1"	6220
1-1/16	6221

LENGTH	PART NO.
1-1/8	6222
1-3/16	6223
1-1/4	6224
1-5/16	6225
1-3/8	6226
1-1/2	6227

Other lengths available on special order.

PART NUMBER ORDERING SYSTEM

XXXX - X - XXXX - XX

PART NO. | THREAD | MATERIAL | FINISH

Refer To Page 66 For Finish Codes.

CHART A - Materials	
MATERIAL	CODE LETTER
ALUMINUM	A
BRASS	B
STAINLESS STEEL	SS
NYLON	N

THREAD CODE	
THREAD	CODE
4-40	0440
6-32	0632
8-32	0832
10-24	1024
10-32	1032

5 Pasco Hill Road • Cromwell, CT 06416-1093
Phone: 860-828-0847 • Call Toll Free: 800-243-6032 • Fax: 860-828-0381
Web Address: http://www.amatom.com • E-Mail: sales@amatom.com

VARIATIONS OF CAPTIVE SCREWS

- This page is written for the convenience of designers, engineers and buyers in calling out other types of similar parts that are available at Amatom. The combinations are unlimited. Contact Amatom's engineering office for price and delivery.
- Variations of captive screws are available in any material and with any finish.

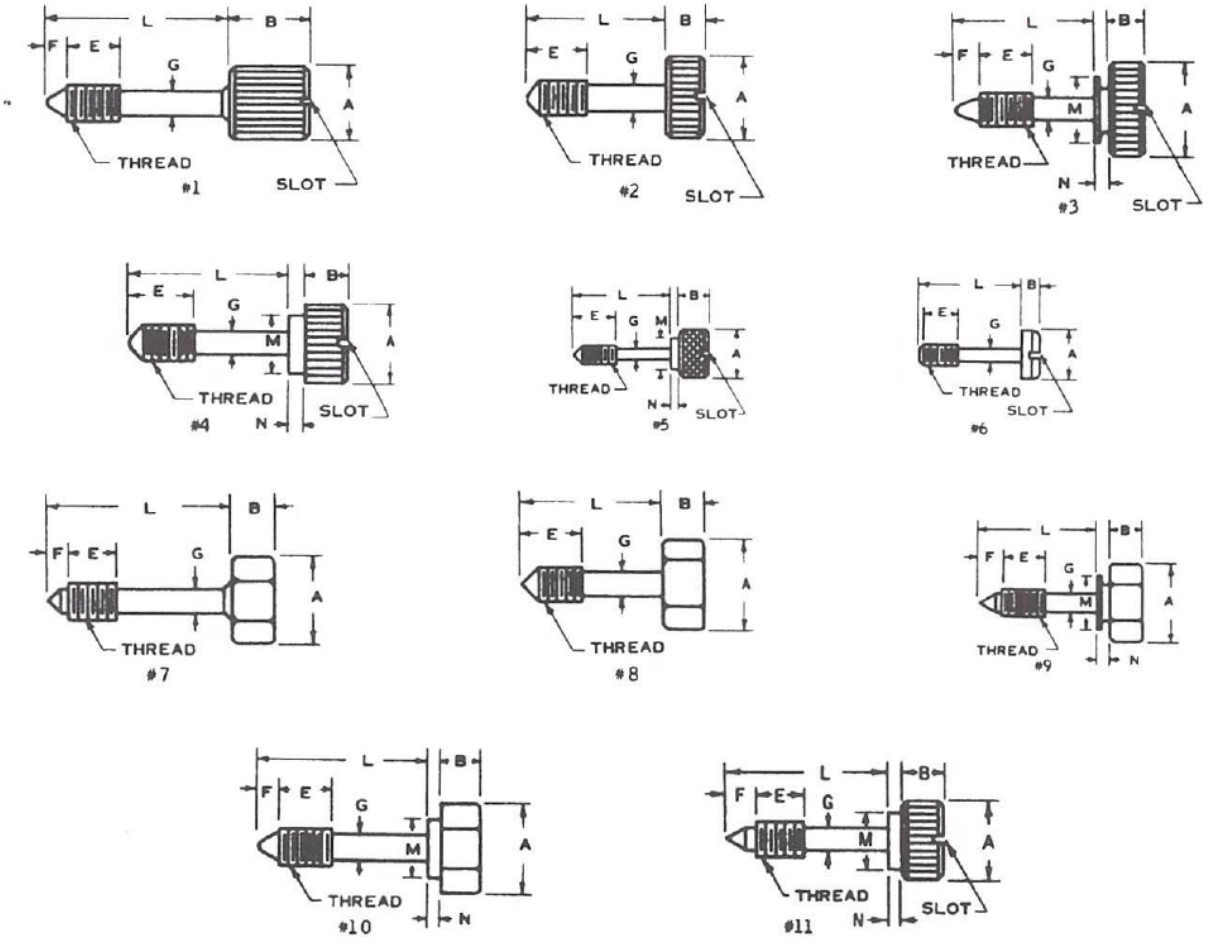

Note: Dimension "A" on Hex Head is across flats.

5 Pasco Hill Road • Cromwell, CT 06416-1093
Phone: 860-828-0847 • Call Toll Free: 800-243-6032 • Fax: 860-828-0381
Web Address: http://www.amatom.com • E-Mail: sales@amatom.com

CAPTIVE SCREW - SHOULDER SCREW

TYPE 6 - CAPTIVE SCREW (Stainless Steel Only)

PART NO.	THREAD	PANEL THICKNESS	A ±1/16	B ±1/64	C ±.005	L ±.015	E ±.015
6760	4-40 UNC-2A	1/16	1/4	1/8	.078	.468	.187
6761	4-40 UNC-2A	1/8	1/4	1/8	.078	.530	.187
6762	6-32 UNC-2A	1/16	9/32	1/8	.095	.530	.218
6763	6-32 UNC-2A	1/8	9/32	1/8	.095	.593	.218
6764	6-32 UNC-2A	3/16	9/32	1/8	.095	.655	.218
6765	8-32 UNC-2A	1/8	5/16	5/32	.120	.656	.250
6766	8-32 UNC-2A	3/16	5/16	5/32	.120	.718	.250
6767	8-32 UNC-2A	1/4	5/16	5/32	.120	.781	.250
6768	10-32 UNF-2A	3/16	3/8	3/16	.130	.843	.312
6769	10-32 UNF-2A	1/4	3/8	3/16	.130	.905	.312

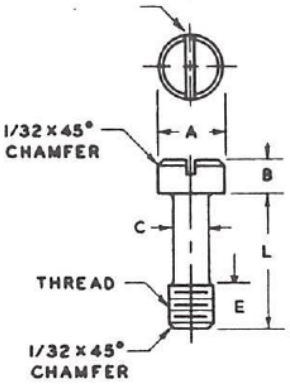

TYPE 7 - PRECISION SHOULDER SCREW

PART NO.	THREAD	A	B	C +.000 −.001	D +.002 −.000	E
7451	4-40 UNC-2A	1/4	1/8	1/8 (.1245)	1/8 - .125	5/32
7452					3/16 - .188	
7453					1/4 - .250	
7454					5/16 - .313	
7455					3/8 - .375	
7456	8-32 UNC-2A	5/16	5/32	3/16 (.1870)	1/8 - .125	3/16
7457					3/16 - .188	
7458					1/4 - .250	
7459					5/16 - .313	
7460					3/8 - .375	
7461					1/2 - .500	
7462					5/8 - .625	
7463					3/4 - .750	
7464					1 - 1.000	
7465					1-1/4 - 1.250	
7466					1-1/2 - 1.500	
7467	10-32 UNF-2A	3/8	3/16	1/4 (.2495)	1/8 - .125	1/4
7468					3/16 - .188	
7469					1/4 - .250	
7470					5/16 - .313	
7471					3/8 - .375	
7472					1/2 - .500	
7473					5/8 - .625	
7474					3/4 - .750	
7475					1 - 1.000	
7476					1-1/4 - 1.250	
7477					1-1/2 - 1.500	

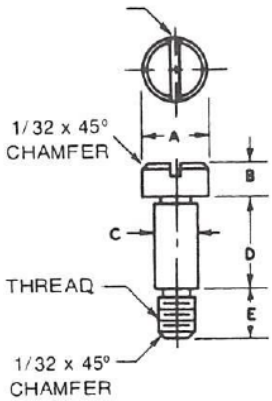

PART NUMBER ORDERING SYSTEM

XXXX - X - XXXX - XX

PART NO. | THREAD | MATERIAL | FINISH

Refer To Page 66 For Finish Codes.

CHART A - Materials

MATERIAL	CODE LETTER
ALUMINUM	A
BRASS	B
STEEL	S
STAINLESS STEEL	SS

THREAD CODE

THREAD	CODE
4-40	0440
6-32	0632
8-32	0832
10-24	1024
10-32	1032
12-24	1224
1/4-20	2520

5 Pasco Hill Road • Cromwell, CT 06416-1093
Phone: 860-828-0847 • Call Toll Free: 800-243-6032 • Fax: 860-828-0381
Web Address: http://www.amatom.com • E-Mail: sales@amatom.com

CAPTIVE PANEL SCREWS

(PANEL SCREW - EXTERNALLY RELIEVED BODY) Per FSC-5305-120

Type 5: Fillister Head

Material
- SS-Corrosive Resisting Steel (Stainless Steel): ASTM A581-75 thru 1/2 O.D. over 1/2 AMS-5762.
- B-Brass: QQ-B-626 Comp 22 1/2 Hard.
- NOTE: Available in other materials on special order - Price on Application.

Standard Finish
- For Corrosive Resisting Steel (SS): Amatom Finish No. 7 - Passivate per cres QQ-P-35.
- For Brass (B): Amatom Finish No. 4 - Nickel plate - QQ-N-290 Grade G.

Head
- Brushed and Polished Heads - Available on special order only.

Threads
- UNC-2A and UNF-2A per National Bureau of Standards Handbook H28 titled "Screw-Thread Standards for Federal Services."

Workmanship
- To high precision standards.

Quality Control
- To MIL-STD-105. Made for use on government equipment.

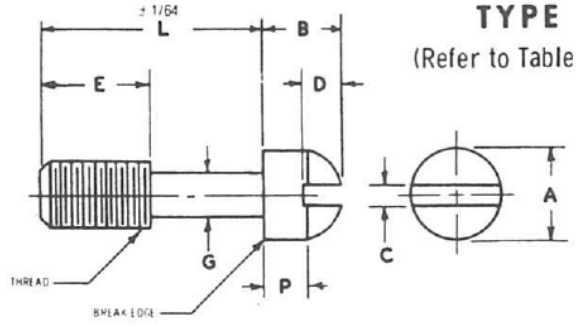

TYPE 5

(Refer to Table 12 and 13)

NOTES:
- Any similar type captive screw in any increment of body or thread length is available on special order. Price on application.
- The stainless steel captive screws are made to MIL-E-16400 (ships).
- Available "Burr-Free" for ultra precision parts. Price on application.

TABLE 12 - Type 5 - Screw Dimensions

For Part No. of Lengths Refer to Table 13 under Required Thread Size and Material.

THREAD	MATERIAL		A	B	C	D	E	G	P
	BRASS	STAIN-LESS STEEL	±.010	±.010	±.005	+.010 -.005	±.015	±.005	±.005
2-56 UNC-2A	B	SS	.132	.075	.027	.026	1/8	.061	.058
3-48 UNC-2A	B	SS	.153	.086	.031	.032	1/8	.070	.066
4-40 UNC-2A	B	SS	.175	.098	.035	.037	5/32	.078	.074
4-48 UNF-2A	B	SS	.175	.098	.035	.037	5/32	.078	.074
6-32 UNC-2A	B	SS	.217	.122	.044	.048	3/16	.095	.091
6-40 UNF-2A	B	SS	.217	.122	.044	.048	3/16	.095	.091
8-32 UNC-2A	B	SS	.250	.145	.050	.058	3/16	.120	.108
10-24 UNC-2A	B	SS	.303	.168	.055	.069	1/4	.130	.124
10-32 UNF-2A	B	SS	.303	.168	.055	.069	1/4	.130	.124

5 Pasco Hill Road • Cromwell, CT 06416-1093
Phone: 860-828-0847 • Call Toll Free: 800-243-6032 • Fax: 860-828-0381
Web Address: http://www.amatom.com • E-Mail: sales@amatom.com

AMATOM®

CAPTIVE PANEL SCREWS

(PANEL SCREW – EXTERNALLY RELIEVED BODY) Per FSC-5305-120

TABLE 13 - TYPE 5

Length	Part No.	Threads								
		2-56	3-48	4-40	4-48	6-32	6-40	8-32	10-24	10-32
1/4	6230	2-56	3-48	4-40	4-48					
5/16	6231	2-56	3-48	4-40	4-48					
3/8	6232	2-56	3-48	4-40	4-48	6-32	6-40	8-32		
7/16	6233	2-56	3-48	4-40	4-48	6-32	6-40	8-32		
1/2	6234	2-56	3-48	4-40	4-48	6-32	6-40	8-32		
9/16	6235	2-56	3-48	4-40	4-48	6-32	6-40	8-32		
5/8	6236	2-56	3-48	4-40	4-48	6-32	6-40	8-32	10-24	10-32
11/16	6237					6-32	6-40	8-32	10-24	10-32
3/4	6238					6-32	6-40	8-32	10-24	10-32
13/16	6239					6-32	6-40	8-32	10-24	10-32
1	6240					6-32	6-40	8-32	10-24	10-32
1-1/8	6241					6-32	6-40	8-32	10-24	10-32
1-1/4	6242					6-32	6-40	8-32	10-24	10-32

Other lengths available on special order. See page 65 to specify part numbers not listed in Table.

Part Nos. by Length and Thread Sizes. For all dimensions other than Length Refer to Table 12.

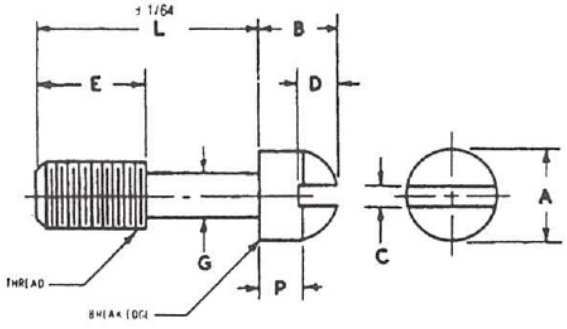

THREAD CODE	
THREAD	CODE
2-56	0256
3-48	0348
4-40	0440
4-48	0448
6-32	0632
6-40	0640
8-32	0832
10-24	1024
10-32	1032

PART NUMBER ORDERING SYSTEM

XXXX - X - XXXX - XX

PART NO. | THREAD | MATERIAL | FINISH

Refer to page 66 for Finish Codes.

CHART A - Materials	
MATERIAL	CODE LETTER
BRASS	B
STEEL	S
STAINLESS STEEL	SS

5 Pasco Hill Road • Cromwell, CT 06416-1093
Phone: 860-828-0847 • Call Toll Free: 800-243-6032 • Fax: 860-828-0381
Web Address: http://www.amatom.com • E-Mail: sales@amatom.com

PANEL SCREW RETAINER

(INSERT - SCREW THREAD-PANEL) Per FSC-5305-120

Type 1: These panel retainers are designed to be used with type 1 captive screws as listed see pages 68 and 69.

Material
- SS-Corrosive Resisting Steel (Stainless Steel): ASTM A581-75 thru 1/2 O.D. over 1/2 AMS-5762.
- B-Brass: QQ-B-626 Comp 22 1/2 Hard.

Standard Finish
- For Corrosive Resisting Steel (SS): Passivate per QQ-P-35.
- For Brass (B): Nickel Plate - QQ-N-290 Grade G.

Threads
- UNC-2B and UNF-2B per National Bureau of Standards Handbook H28 titled "Screw-Thread Standards for Federal Services."

Workmanship
- To high precision standards.

Quality Control
- To MIL-STD-105. Made for use on government equipment.

TYPE 1 (Refer to Table 14)

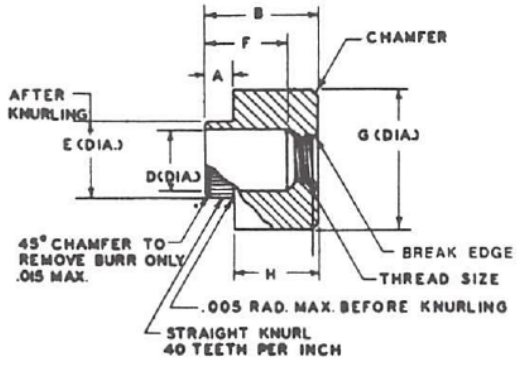

NOTES:
- Available in other materials on special order. Price on Application.
- Any similar type captive panel retainer in any increment of body or thread size is available on special order. Price on Application.
- CHAMFER - UNDER 1/2 inch "G" dimension, chamfer is 1/64 x 45°. 1/2 inch "G" dimension and over, chamfer is 1/32 x 45°.
- X-Hole - Size for Press Fit See Table 20, page 81.

TABLE 15
CODE FOR SHANK LENGTH (A DIM.)

CODE	LENGTH OF SHANK	PANEL THICKNESS
A	.050	.048-.072
B	.080	.074-.109
C	.125	.119-.156
D	.188	.188
E	.250	.250

Note: For special shank lengths contact Amatom sales office for part numbers.

TABLE 14 - Type 1

PART NO./MATERIAL		THREAD SIZE	PANEL THICKNESS RANGE	A	REF. B	D	E +.003 −.000	F	G	H
BRASS (B)	CRES (SS)			±.005	±.010	±.005		±.005	±.003	±.005
6250A-B-0440	6250A-SS-0440	4-40 UNC-2B	.048-.072	.050	1/4	.140	.198	.1640	1/4	.200
6250B-B-0440	6250B-SS-0440		.074-.109	.080						.170
6250C-B-0440	6250C-SS-0440		.119-.156	.125						.125
6251A-B-0632	6251A-SS-0632	6-32 UNC-2B	.048-.072	.050	5/16	.150	.198	.2150	1/4	.262
6251B-B-0632	6251B-SS-0632		.074-.109	.080						.232
6251C-B-0632	6251C-SS-0632		.119-.156	.125						.187
6251D-B-0632	6251D-SS-0632		.188	.188						.124
6252A-B-0832	6252A-SS-0832	8-32 UNC-2B	.048-.072	.050	5/16	.188	.228	.2110	5/16	.262
6252B-B-0832	6252B-SS-0832		.074-.109	.080						.232
6252C-B-0832	6252C-SS-0832		.119-.156	.125						.187
6252D-B-0832	6252D-SS-0832		.188	.188						.124
6253A-B-1024	6253A-SS-1024	10-24 UNC-2B	.048-.072	.050	3/8	.228	.280	.2380	3/8	.325
6253B-B-1024	6253B-SS-1024		.074-.109	.080						.295
6253C-B-1024	6253C-SS-1024		.119-.156	.125						.250
6253D-B-1024	6253D-SS-1024		.188	.188						.187
6253E-B-1024	6253E-SS-1024		.250	.250						.125

continued...

AMATOM®

PANEL SCREW RETAINER

(INSERT-SCREW THREAD-PANEL) Per FSC-5340-411

TABLE 14 - Type 1 (continued from previous page)

PART NO./MATERIAL		THREAD SIZE	PANEL THICKNESS RANGE	A	REF. B	D	E +.003 −.000	F	G	H
BRASS	CRES (SS)			±.005	±.010	±.005		±.005	±.003	±.005
6254A-B-1032	6254A-SS-1032	10-32 UNF-2B	.048-.072	.050	3/8	.228	.280	.2380	3/8	.325
6254B-B-1032	6254B-SS-1032		.074-.109	.080						.295
6254C-B-1032	6254C-SS-1032		.119-.156	.125						.250
6254D-B-1032	6254D-SS-1032		.118	.188						.187
6254E-B-1032	6254E-SS-1032		.250	.250						.125
6255A-B-2520	6255A-SS-2520	1/4-20 UNC-2B	.048-.072	.050	7/16	.295	.366	.2990	1/2	.387
6255B-B-2520	6255B-SS-2520		.074-.109	.080						.357
6255C-B-2520	6255C-SS-2520		.119-.156	.125						.312
6255D-B-2520	6255D-SS-2520		.188	.188						.249
6255E-B-2520	6255E-SS-2520		.250	.250						.187
6256A-B-2528	6256A-SS-2528	1/4-28 UNF-2B	.048-.072	.050	7/16	.295	.366	.2990	1/2	.387
6256B-B-2528	6256B-SS-2528		.074-.109	.080						.357
6256C-B-2528	6256C-SS-2528		.119-.156	.125						.312
6256D-B-2528	6256D-SS-2528		.188	.188						.249
6256E-B-2528	6256E-SS-2528		.250	.250						.187
6257A-B-3118	6257A-SS-3118	5/16-18 UNC-2B	.048-.072	.050	1/2	.347	.414	.3640	5/8	.450
6257B-B-3118	6257B-SS-3118		.074-.109	.080						.420
6257C-B-3118	6257C-SS-3118		.119-.156	.125						.375
6257D-B-3118	6257D-SS-3118		.188	.188						.312
6257E-B-3118	6257E-SS-3118		.250	.250						.250
6258B-B-3716	6258B-SS-3716	*3/8-16 UNC-2B	.074-.109	.080	9/16	.406	.479	.4280	7/8	.482
6258C-B-3716	6258C-SS-3716		.119-.156	.125						.437
6258D-B-3716	6258D-SS-3716		.188	.188						.374
6258E-B-3716	6258E-SS-3716		.250	.250						.312

NOTE: *3/8-16 size available on special order only when not in stock.

METHOD OF INSTALLATION

(FOR KNURLED SHANK RETAINERS)

TABLE 20

SHANK DIA. "E"	.198	.228	.280	.366	.414	.479
X DIM.	.188	.218	.270	.356	.404	.469

PRESS FIT ONLY

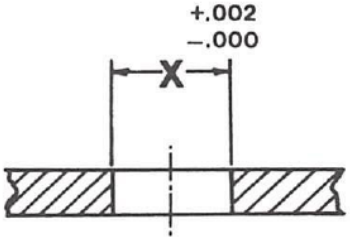

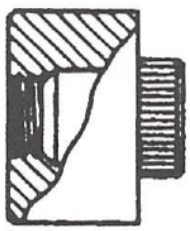

5 Pasco Hill Road • Cromwell, CT 06416-1093
Phone: 860-828-0847 • Call Toll Free: 800-243-6032 • Fax: 860-828-0381
Web Address: http://www.amatom.com • E-Mail: sales@amatom.com

PANEL SCREW RETAINER

(INSERT-SCREW THREAD-PANEL) Per FSC-5340-411

Type 2A: These panel retainers are designed to be used with type 2 captive screws as listed on pages 70 and 71.

RETAINER

Material
- SS-Corrosive Resisting Steel (Stainless Steel): ASTM A581-75 thru 1/2 O.D. over 1/2 AMS-5762.
- B-Brass: QQ-B-626 Comp. 22 1/2 Hard.

Standard Finish
- For Corrosive Resisting Steel (SS): Passivate per QQ-P-35.
- For Brass (B): Nickel plate - QQ-N-290 Grade G.

Threads
- UNC-2B and UNF-2B per National Bureau of Standards Handbook H28 titled "Screw-Thread Standards for Federal Services."

Workmanship
- To high precision standards.

Quality Control
- To MIL-STD-105. Made for use on Government Equipment.

TYPE 2A

(Refer to Table 16)

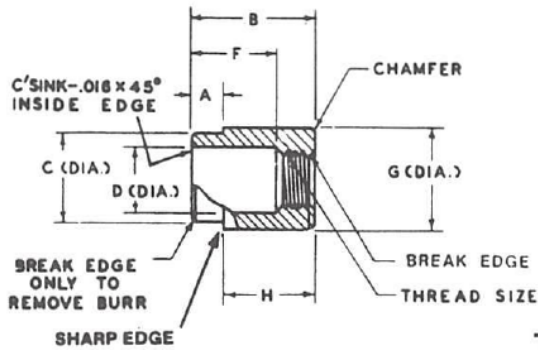

NOTES:
- Available in other materials on special order. Price on application.
- Any similar type captive panel retainer in any increment of body or thread size is available on special order. Price on application.
- CHAMFER - UNDER 1/2 inch "G" dimension, chamfer is 1/64 x 45°. 1/2 inch "G" dimension and over, chamfer is 1/32 x 45°.

TABLE 17

CODE FOR SHANK LENGTH (A DIM.)

CODE	LENGTH OF SHANK	PANEL THICKNESS
A	.062	.052-.067
B	.093	.084-.099
C	.125	.109-.140
D	.187	.171-.203
E	.250	.234-.265

NOTE: For special shank lengths contact Amatom sales office for part numbers.

TABLE 16 - Type 2A

PARTNO./MATERIAL		THREAD SIZE	PANEL THICKNESS RANGE	NOMINAL PANEL	A	B	C +.000 −.003	D	F	G	H
BRASS (B)	CRES (S)				±.005	±.010		±.005	±.005	±.003	±.005
6270A-B-0440	6270A-SS-0440	4-40 UNC-2B	.052-.067	1/16	.062	3/8	.250	.188	.2580	9/32	.313
6270B-B-0440	6270B-SS-0440		.084-.099	3/32	.093						.282
6270C-B-0440	6270C-SS-0440		.109-.140	1/8	.125						.250
6271A-B-0632	6271A-SS-0440	6-32 UNC-2B	.052-.067	1/16	.062	3/8	.250	.188	.2660	9/32	.313
6271B-B-0632	6271B-SS-0632		.084-.099	3/32	.093						.282
6271C-B-0632	6271C-SS-0632		.109-.140	1/8	.125						.250
6272A-B-0832	6272A-SS-0832	8-32 UNC-2B	.052-.067	1/16	.062	9/16	.433	.375	.3740	17/32	.500
6272B-B-0832	6272B-SS-0832		.084-.099	3/32	.093						.469
6272C-B-0832	6272C-SS-0832		.109-.140	1/8	.125						.437
6272D-B-0832	6272D-SS-0832		.171-.203	3/16	.187						.375
6272E-B-0832	6272E-SS-0832		.234-.265	1/4	.250						.312
6273A-B-1024	6273A-SS-1024	10-24 UNC-2B	.052-.067	1/16	.062	9/16	.433	.375	.3820	17/32	.500
6273B-B-1024	6273B-SS-1024		.084-.099	3/32	.093						.469
6273C-B-1024	6273C-SS-1024		.109-.140	1/8	.125						.437
6273D-B-1024	6273D-SS-1024		.171-.203	3/16	.187						.375
6273E-B-1024	6273E-SS-1024		.234-.265	1/4	.250						.312

continued...

PANEL SCREW RETAINER

(INSERT-SCREW THREAD-PANEL) Per FSC-5340-411

TABLE 16 - Type 2A (continued from previous page)

PART NO./MATERIAL		THREAD SIZE	PANEL THICKNESS RANGE	NOMINAL PANEL SIZE	A ±.005	B REF. ±.010	C +.000 −.003	D ±.005	F ±.005	G ±.003	H ±.005
BRASS (B)	CRES (SS)										
6274A-B-1032	6274A-SS-1032	10-32 UNF-2B	.052-.067	1/16	.062	9/16	.433	.375	.382	17/32	.500
6274B-B-1032	6274B-SS-1032		.084-.099	3/32	.093						.469
6274C-B-1032	6274C-SS-1032		.109-.140	1/8	.125						.437
6274D-B-1032	6274D-SS-1032		.171-.203	3/16	.187						.375
6274E-B-1032	6274E-SS-1032		.234-.265	1/4	.250						.312
6275A-B-1224	6275A-SS-1224	12-24 UNC-2B	.052-.067	1/16	.062	9/16	.433	.375	.390	17/32	.500
6275B-B-1224	6275B-SS-1224		.084-.099	3/32	.093						.469
6275C-B-1224	6275C-SS-1224		.109-.140	1/8	.125						.437
6275D-B-1224	6275D-SS-1224		.171-.203	3/16	.187						.375
6275E-B-1224	6275E-SS-1224		.234-.265	1/4	.250						.312
6276A-B-2520	6276A-SS-2520	1/4-20 UNC-2B	.052-.067	1/16	.062	9/16	.433	.375	.400	17/32	.500
6276B-B-2520	6276B-SS-2520		.084-.099	3/32	.093						.469
6276C-B-2520	6276C-SS-2520		.109-.140	1/8	.125						.437
6276D-B-2520	6276D-SS-2520		.171-.203	3/16	.187						.375
6276E-B-2520	6276E-SS-2520		.234-.265	1/4	.250						.312
6277A-B-2528	6277A-SS-2528	1/4-28 UNF-2B	.052-.067	1/16	.062	9/16	.433	.375	.400	17/32	.500
6277B-B-2528	6277B-SS-2528		.084-.099	3/32	.093						.469
6277C-B-2528	6277C-SS-2528		.109-.140	1/8	.125						.437
6277D-B-2528	6277D-SS-2528		.171-.203	3/16	.187						.375
6277E-B-2528	6277E-SS-2528		.234-.265	1/4	.250						.312

RETAINER-ASSEMBLY

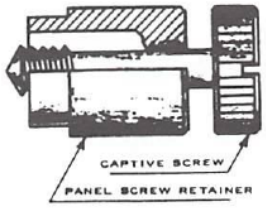

METHOD OF INSTALLATION

NOTES • 1-X Dim. per table 21
• 2-X Hole to be drilled or punched.

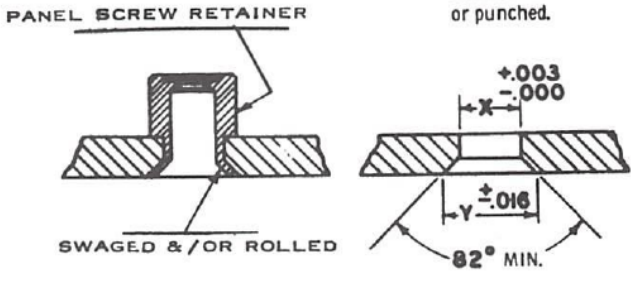

TABLE 21 "Y" DIMENSION (TOL ±.016)

SHANK DIA "C"	.250	.433
X DIA.	.257	.437
Y DIA.	.318	.498

RULE OF THUMB FOR "Y" COUNTERSINK
Y = X + .045 Min.
or
.078 Max.

5 Pasco Hill Road • Cromwell, CT 06416-1093
Phone: 860-828-0847 • Call Toll Free: 800-243-6032 • Fax: 860-828-0381
Web Address: http://www.amatom.com • E-Mail: sales@amatom.com

PANEL SCREW RETAINER

(INSERT-SCREW THREAD-PANEL) Per FSC-5340-411

Type 2B: These panel retainers are designed to be used with type 2 captive screws as listed on pages 70 and 71.

NOTE: Part Numbers for Panel Retainers as listed in Table 18 include the Spring.

Material
- SS-Corrosive Resisting Steel (Stainless Steel): ASTM A581-75 thru 1/2 O.D. over 1/2 AMS-5762.
- B-Brass: QQ-B-626 Comp. 22 1/2 Hard.

Standard Finish
- For Corrosive Resisting Steel (SS): Passivate per QQ-P-35.
- For Brass (B): Nickel Plate per QQ-N-290 Grade G.

Threads
- UNC-2B and UNF-2B per National Bureau of Standards Handbook H28 titled "Screw-Thread Standards for Federal Services."

Workmanship
- To high precision standards.

Quality Control
- To MIL-STD-105. Made for use on Government Equipment.

TYPE 2B (Refer to Table 18)

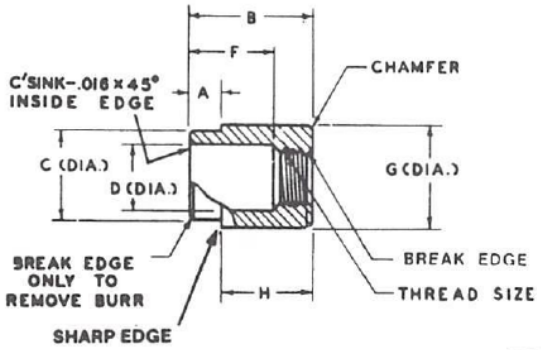

NOTES:
- Available in other materials on special order. Price on application.
- Any similar type captive panel retainer in any increment of body or thread size is available on special order. Price on application.
- CHAMFER - under 1/2 inch "G" dimension, chamfer is 1/64 x 45°. 1/2 inch "G" dimension and over, chamfer is 1/32 x 45°.

TABLE 17

CODE FOR SHANK LENGTH (A DIM.)

CODE	LENGTH OF SHANK	PANEL THICKNESS
A	.062	.052-.067
B	.093	.084-.099
C	.125	.109-.140
D	.187	.171-.203
E	.250	.234-.265

NOTE: For special shank lengths contact Amatom sales office for part numbers.

TABLE 18 - Type 2B

PART NO./MATERIAL		THREAD SIZE	PANEL THICKNESS RANGE	NOMINAL PANEL SIZE	A ±.005	B REF. ±.010	C +.000 −.003	D ±.005	F ±.005	G ±.003	H ±.005	J +.007 −.000	K +.005 −.000
BRASS (B)	CRES (SS)												
6280A-B-0440	6280A-SS-0440	4-40 UNC-2B	.052-.067	1/16	.062	7/16	.250	.188	.2820	9/32	.375	.078	.192
6280B-B-0440	6280B-SS-0440		.084-.099	3/32	.093						.344		
6280C-B-0440	6280C-SS-0440		.109-.140	1/8	.125						.312		
6281A-B-0632	6281A-SS-0632	6-32 UNC-2B	.052-.067	1/16	.062	7/16	.250	.188	.2660	9/32	.375	.078	.192
6281B-B-0632	6281B-SS-0632		.084-.099	3/32	.093						.344		
6281C-B-0632	6281C-SS-0632		.109-.140	1/8	.125						.312		
6282A-B-0832	6282A-SS-0832	8-32 UNC-2B	.052-.067	1/16	.062	5/8	.433	.375	.3740	17/32	.563	.093	.312
6282B-B-0832	6282B-SS-0832		.084-.099	3/32	.093						.532		
6282C-B-0832	6282C-SS-0832		.109-.140	1/8	.125						.500		
6282D-B-0832	6282D-SS-0832		.171-.203	3/16	.187						.438		
6282E-B-0832	6282E-SS-0832		.234-.265	1/4	.250						.375		
6283A-B-1024	6283A-SS-1024	10-24 UNC-2B	.052-.067	1/16	.062	5/8	.433	.375	.3820	17/32	.563	.093	.312
6283B-B-1024	6283B-SS-1024		.084-.099	3/32	.093						.532		
6283C-B-1024	6283C-SS-1024		.109-.140	1/8	.125						.500		
6283D-B-1024	6283D-SS-1024		.171-.203	3/16	.187						.438		
6283E-B-1024	6283E-SS-1024		.234-.265	1/4	.250						.375		

continued on next page

5 Pasco Hill Road • Cromwell, CT 06416-1093
Phone: 860-828-0847 • Call Toll Free: 800-243-6032 • Fax: 860-828-0381
Web Address: http://www.amatom.com • E-Mail: sales@amatom.com

PANEL SCREW RETAINER

(INSERT-SCREW THREAD-PANEL) Per FSC-5340-411

TABLE 18 - Type 2B (continued from previous page)

PART NO./MATERIAL		THREAD SIZE	PANEL THICKNESS RANGE	NOMINAL PANEL SIZE	A ±.005	B REF. ±.010	C +.000 −.003	D ±.005	F ±.005	G ±.003	H ±.005	J +.007 −.000	K +.005 −.000
BRASS (B)	CRES (SS)												
6284A-B-1032	6284A-SS-1032	10-32 UNF-2B	.052-.067	1/16	.062	5/8	.433	.375	.3820	17/32	.563	.093	.312
6284B-B-1032	6284B-SS-1032		.084-.099	3/32	.093						.532		
6284C-B-1032	6284C-SS-1032		.109-.140	1/8	.125						.500		
6284D-B-1032	6284D-SS-1032		.171-.203	3/16	.187						.438		
6284E-B-1032	6284E-SS-1032		.234-.265	1/4	.250						.375		
6285A-B-1224	6285A-SS-1224	12-24 UNC-2B	.052-.067	1/16	.062	5/8	.433	.375	.3900	17/32	.563	.093	.312
6285B-B-1224	6285B-SS-1224		.084-.099	3/32	.093						.532		
6285C-B-1224	6285C-SS-1224		.109-.140	1/8	.125						.500		
6285D-B-1224	6285D-SS-1224		.171-.203	3/16	.187						.438		
6285E-B-1224	6285E-SS-1224		.234-.265	1/4	.250						.375		
6286A-B-2520	6286A-SS-2520	1/4-20 UNC-2B	.052-.067	1/16	.062	5/8	.433	.375	.4000	17/32	.563	.093	.312
6286B-B-2520	6286B-SS-2520		.084-.099	3/32	.093						.532		
6286C-B-2520	6286C-SS-2520		.109-.140	1/8	.125						.500		
6286D-B-2520	6286D-SS-2520		.171-.203	3/16	.187						.438		
6286E-B-2520	6286E-SS-2520		.234-.265	1/4	.250						.375		
6287A-B-2528	6287A-SS-2528	1/4-28 UNF-2B	.052-.067	1/16	.062	5/8	.433	.375	.4000	17/32	.563	.093	.312
6287B-B-2528	6287B-SS-2528		.084-.099	3/32	.093						.532		
6287C-B-2528	6287C-SS-2528		.109-.140	1/8	.125						.500		
6287D-B-2528	6287D-SS-2528		.171-.203	3/16	.187						.438		
6287E-B-2528	6287E-SS-2528		.234-.265	1/4	.250						.375		

RETAINER ASSEMBLY

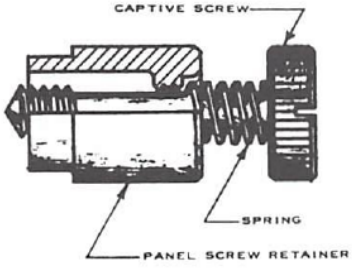

SPRING

MATERIAL:

- Stainless Steel Wire ASTM-A313
- 5 turns on a spring plus 1 flat turn each end.

NOTES:

- Part Number for panel retainer type 2B includes the spring.
- Spring heights will vary as lengths change so as to insure constant and ample tension.

Part No. 5616 - Spring (Miniature) use with 4-40 and 6-32

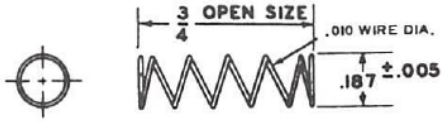

Part No. 5617-Spring (Standard)

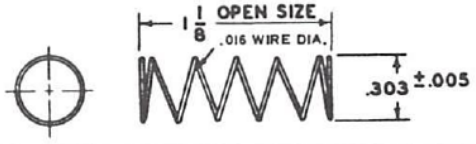

METHOD OF INSTALLATION

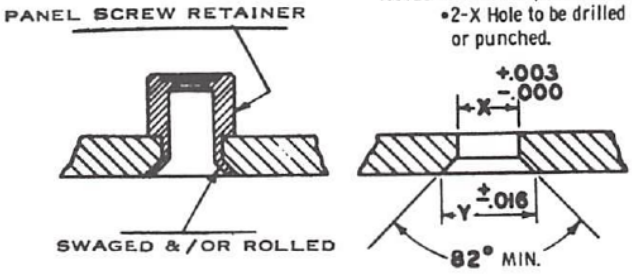

TABLE 21 "Y" DIMENSION (TOL ±.016)

SHANK DIA "C"	.250	.433
X DIA.	.257	.437
Y DIA.	.318	.498

RULE OF THUMB FOR "Y" COUNTERSINK
Y = X + .045 Min.
or
.078 Max.

5 Pasco Hill Road • Cromwell, CT 06416-1093
Phone: 860-828-0847 • Call Toll Free: 800-243-6032 • Fax: 860-828-0381
Web Address: http://www.amatom.com • E-Mail: sales@amatom.com

PANEL SCREW RETAINER

(INSERT-SCREW THREAD-PANEL) Per FSC-5340-411

Type 2C: These panel retainers are designed to be used with type 2 captive screws as listed on pages 70 and 71.

NOTE: Part Numbers for Panel Screw Retainers as listed in Table 19 include the Retainer Ring.

Material • SS-Corrosive Resisting Steel (Stainless Steel): ASTM A581-75 thru 1/2 O.D. over 1/2 AMS-5762.
• B-Brass: QQ-B-626 Comp. 22 1/2 Hard.

Standard Finish • For Corrosive Resisting Steel (SS): Passivate per QQ-P-35.
• For Brass (B): Nickel Plate per QQ-N-290 Grade G.

Threads • UNC-2B and UNF-2B per National Bureau of Standards Handbook H28 titled "Screw-Thread Standards for Federal Services."

Workmanship • To high precision standards.

Quality Control • To MIL-STD-105. Made for use on Government Equipment.

TYPE 2C (Refer to Table 19)

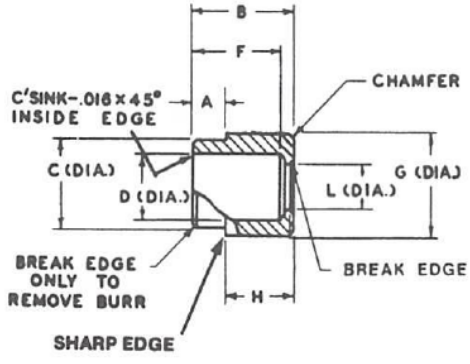

NOTES: • Available in other materials on special order. Price on application.

• Any similar type captive panel retainer in any increment of body or thread size is available on special order. Price on application.

• CHAMFER - under 1/2 inch "G" dimension, chamfer is 1/64 x 45°. 1/2 inch "G" dimension and over, chamfer is 1/32 x 45°.

TABLE 17

CODE FOR SHANK LENGTH (A DIM.)

CODE	LENGTH OF SHANK	PANEL THICKNESS
A	.062	.052-.067
B	.093	.084-.099
C	.125	.109-.140
D	.187	.171-.203
E	.250	.234-.265

NOTE: For special shank lengths contact Amatom sales office for part numbers.

TABLE 19 - Type 2C

PART NO./MATERIAL		THREAD SIZE	PANEL THICKNESS RANGE	NOMINAL PANEL SIZE	A ±.005	B REF. ±.010	C +.000 −.003	D ±.005	F ±.005	G ±.003	H ±.005	L +.004 −.000
BRASS (B)	CRES (SS)											
6290A-B-0440	6290A-SS-0440	4-40 UNC-2B	.052-.067	1/16	.062	3/8	.250	.188	.2900	9/32	.313	.125
6290B-B-0440	6290B-SS-0440		.084-.099	3/32	.093						.282	
6290C-B-0440	6290C-SS-0440		.109-.140	1/8	.125						.250	
6291A-B-0632	6291A-SS-0632	6-32 UNC-2B	.052-.067	1/16	.062	3/8	.250	.188	.2970	9/32	.313	.152
6291B-B-0632	6291B-SS-0632		.084-.099	3/32	.093						.282	
6291C-B-0632	6291C-SS-0632		.109-.140	1/8	.125						.250	
6292A-B-0832	6292A-SS-0832	8-32 UNC-2B	.052-.067	1/16	.062	9/16	.433	.375	.4370	17/32	.500	.177
6292B-B-0832	6292B-SS-0832		.084-.099	3/32	.093						.469	
6292C-B-0832	6292C-SS-0832		.109-.140	1/8	.125						.437	
6292D-B-0832	6292D-SS-0832		.171-.203	3/16	.187						.375	
6292E-B-0832	6292E-SS-0832		.234-.265	1/4	.250						.312	
6293A-B-1024	6293A-SS-1024	10-24 UNC-2B	.052-.067	1/16	.062	9/16	.433	.375	.4450	17/32	.500	.203
6293B-B-1024	6293B-SS-1024		.084-.099	3/32	.093						.469	
6293C-B-1024	6293C-SS-1024		.109-.140	1/8	.125						.437	
6293D-B-1024	6293D-SS-1024		.171-.203	3/16	.187						.375	
6293E-B-1024	6293E-SS-1024		.234-.265	1/4	.250						.312	

continued on next page

5 Pasco Hill Road • Cromwell, CT 06416-1093
Phone: 860-828-0847 • Call Toll Free: 800-243-6032 • Fax: 860-828-0381
Web Address: http://www.amatom.com • E-Mail: sales@amatom.com

PANEL SCREW RETAINER

(INSERT-SCREW THREAD-PANEL) Per FSC-5340-411

TABLE 19 - Type 2C (continued from previous page)

PART NO./MATERIAL		THREAD SIZE CLEARANCE	PANEL THICKNESS RANGE	NOMINAL PANEL SIZE	A	B	C	D	F	G	H	L
BRASS (B)	CRES (SS)				±.005	REF. ±.010	+.000 −.003	±.005	±.005	±.003	±.005	+.004 −.000
6294A-B-1032	6294A-SS-1032		.052-.067	1/16	.062						.500	
6294B-B-1032	6294B-SS-1032		.084-.099	3/32	.093						.469	
6294C-B-1032	6294C-SS-1032	10-32 UNF-2B	.109-.140	1/8	.125	9/16	.433	.375	.4450	17/32	.437	.203
6294D-B-1032	6294D-SS-1032		.171-.203	3/16	.187						.375	
6294E-B-1032	6294E-SS-1032		.234-.265	1/4	.250						.312	
6295A-B-1224	6295A-SS-1224		.052-.067	1/16	.062						.500	
6295B-B-1224	6295B-SS-1224	12-24 UNC-2B	.084-.099	3/32	.093						.469	
6295C-B-1224	6295C-SS-1224		.109-.140	1/8	.125	9/16	.433	.375	.4520	17/32	.437	.228
6295D-B-1224	6295D-SS-1224		.171-.203	3/16	.187						.375	
6295E-B-1224	6295E-SS-1224		.234-.265	1/4	.250						.312	
6296A-B-2520	6296A-SS-2520		.052-.067	1/16	.062						.500	
6296B-B-2520	6296B-SS-2520		.084-.099	3/32	.093						.469	
6296C-B-2520	6296C-SS-2520	1/4-20 UNC-2B	.109-.140	1/8	.125	9/16	.433	.375	.4630	17/32	.437	.257
6296D-B-2520	6296D-SS-2520		.171-.203	3/16	.187						.375	
6296E-B-2520	6296E-SS-2520		.234-.265	1/4	.250						.312	
6297A-B-2528	6297A-SS-2528		.052-.067	1/16	.062						.500	
6297B-B-2528	6297B-SS-2528		.084-.099	3/32	.093						.469	
6297C-B-2528	6297C-SS-2528	1/4-28 UNF-2B	.109-.140	1/8	.125	9/16	.433	.375	.4630	17/32	.437	.257
6297D-B-2528	6297D-SS-2528		.171-.203	3/16	.187						.375	
6297E-B-2528	6297E-SS-2528		.234-.265	1/4	.250						.312	

RETAINER ASSEMBLY

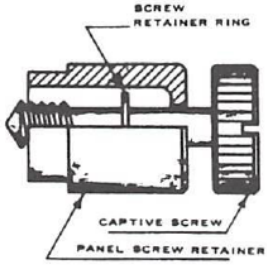

RETAINER RING

PLASTIC OR METAL

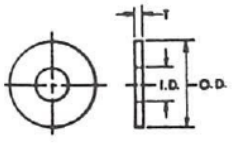

MATERIAL-NYLON

PART NO.	THREAD SIZE	±.003 O.D.	±.003 I.D.	±.002 T
4382-1	4-40	.171	.100	.015
4382-2	6-32	.171	.125	.020
4382-3	8-32	.312	.152	.020
4382-4	10-24	.312	.167	.020
4382-5	10-32	.312	.173	.020
4382-6	12-24	.312	.193	.020
4382-7	1/4-20	.312	.228	.030
4382-8	1/4-28	.312	.228	.030

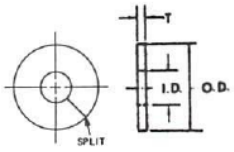

MATERIAL-STAINLESS STEEL

PART NO.	THREAD SIZE	±.002 O.D.	±.002 I.D.	±.002 T
4382-1-SS	4-40	.177	.092	.010
4382-2-SS	6-32	.177	.108	.010
4382-3-SS	8-32	.328	.146	.012
4382-4-SS	10-24	.328	.166	.012
4382-5-SS	10-32	.328	.166	.012
4382-6-SS	12-24	.328	.180	.012
4382-7-SS	1/4-20	.328	.204	.012
4382-8-SS	1/4-28	.328	.213	.012

METHOD OF INSTALLATION

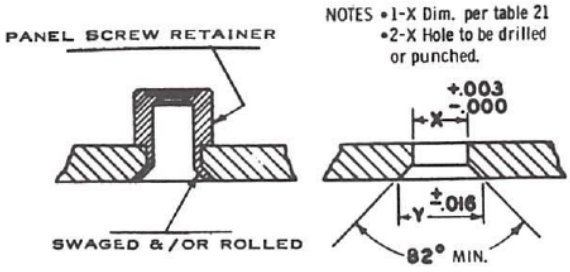

TABLE 21 "Y" DIMENSION (TOL ±.016)

SHANK DIA "C"	.250	.433
X DIA.	.257	.437
Y DIA.	.318	.498

RULE OF THUMB FOR "Y" COUNTERSINK
Y = X + .045 Min.
or
.078 Max.

5 Pasco Hill Road • Cromwell, CT 06416-1093
Phone: 860-828-0847 • Call Toll Free: 800-243-6032 • Fax: 860-828-0381
Web Address: http://www.amatom.com • E-Mail: sales@amatom.com

PANEL SCREW RETAINER

(INSERT-SCREW THREAD-PANEL) Per FSC-5340-411

Type 2: These panel retainers are designed to be used with type 2 captive screws as listed on pages 70 and 71.

NOTE: Part Numbers for Panel Screw Retainers as listed in Table 24 include BOTH the Retainer Ring and the Spring.

Material
- SS-Corrosive Resisting Steel (Stainless Steel): ASTM A581-75 thru 1/2 O.D. over 1/2 AMS-5762.
- B-Brass: QQ-B-626 Comp. 22 1/2 Hard.

Standard Finish
- For Corrosive Resisting Steel (SS): Passivate per QQ-P-35.
- For Brass (B): Nickel Plate per QQ-N-290 Grade G.

Threads
- UNC-2B and UNF-2B per National Bureau of Standards Handbook H28 titled "Screw-Thread Standards for Federal Services."

Workmanship
- To high precision standards.

Quality Control
- To MIL-STD-105. Made for use on Government Equipment.

TYPE 2D (Refer to Table 24)

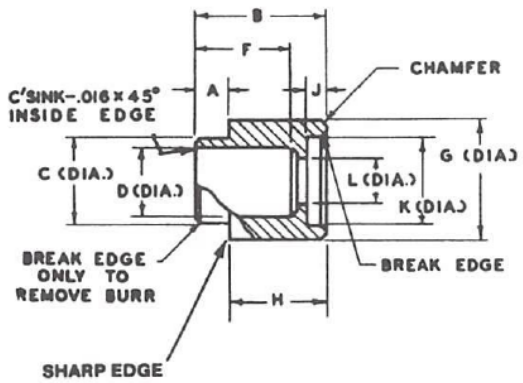

NOTES:
- Available in other materials on special order. Price on application.
- Any similar type captive panel retainer in any increment of body or thread size is available on special order. Price on application.
- CHAMFER - under 1/2 inch "G" dimension, chamfer is 1/64 x 45°. 1/2 inch "G" dimension and over, chamfer is 1/32 x 45°.

TABLE 17

CODE FOR SHANK LENGTH (A DIM.)

CODE	LENGTH OF SHANK	PANEL THICKNESS
A	.062	.052-.067
B	.093	.084-.099
C	.125	.109-.140
D	.187	.171-.203
E	.250	.234-.265

NOTE: For special shank lengths contact Amatom sales office for part numbers.

TABLE 24 - Type 2D

PART NO./MATERIAL		THREAD SIZE CLEARANCE	PANEL THICKNESS RANGE	NOMINAL PANEL SIZE	A ±.005	B REF. ±.010	C +.000 −.003	D ±.005	F ±.005	G ±.003	H ±.005	J +.005 −.000	K +.005 -.000	L +.004 -.000
BRASS (B)	CRES (SS)													
6300A-B-0440	6300A-SS-0440	4-40 UNC-2B	.052-.067	1/16	.062	7/16	.250	.188	.2900	9/32	.375	.078	.192	.125
6300B-B-0440	6300B-SS-0440		.084-.099	3/32	.093						.344			
6300C-B-0440	6300C-SS-0440		.109-.140	1/8	.125						.312			
6301A-B-0632	6301A-SS-0632	6-32 UNC-2B	.052-.067	1/16	.062	7/16	.250	.188	.2980	9/32	.375	.078	.192	.152
6301B-B-0632	6301B-SS-0632		.084-.099	3/32	.093						.344			
6301C-B-0632	6301C-SS-0632		.109-.140	1/8	.125						.312			
6302A-B-0832	6302A-SS-0832	8-32 UNC-2B	.052-.067	1/16	.062	5/8	.433	.375	.4050	17/32	.563	.096	.312	.177
6302B-B-0832	6302B-SS-0832		.084-.099	3/32	.093						.532			
6302C-B-0832	6302C-SS-0832		.109-.140	1/8	.125						.500			
6302D-B-0832	6302D-SS-0832		.171-.203	3/16	.187						.438			
6302E-B-0832	6302E-SS-0832		.234-.265	1/4	.250						.375			
6303A-B-1024	6303A-SS-1024	10-24 UNC-2B	.052-.067	1/16	.062	5/8	.433	.375	.4130	17/32	.563	.096	.312	.203
6303B-B-1024	6303B-SS-1024		.084-.099	3/32	.093						.532			
6303C-B-1024	6303C-SS-1024		.109-.140	1/8	.125						.500			
6303D-B-1024	6303D-SS-1024		.171-.203	3/16	.187						.438			
6303E-B-1024	6303E-SS-1024		.234-.265	1/4	.250						.375			

continued on next page

5 Pasco Hill Road • Cromwell, CT 06416-1093
Phone: 860-828-0847 • Call Toll Free: 800-243-6032 • Fax: 860-828-0381
Web Address: http://www.amatom.com • E-Mail: sales@amatom.com

AMATOM®

PANEL SCREW RETAINER

(INSERT-SCREW THREAD-PANEL) Per FSC-5340-411

TABLE 24 - Type 2D (continued from previous page)

PART NO./MATERIAL		THREAD SIZE CLEARANCE	PANEL THICKNESS RANGE	NOMINAL PANEL SIZE	A	B REF.	C +.000 −.003	D	F	G	H	J +.005 −.000	K +.005 -.000	L +.004 -.000
BRASS (B)	CRES (S)				±.005	±.010		±.005	±.005	±.003	±.005			
6304A-B-1032	6304A-SS-1032	10-32 UNF-2B	.052-.067	1/16	.062	5/8	.433	.375	.4130	17/32	.563	.096	.312	.203
6304B-B-1032	6304B-SS-1032		.084-.099	3/32	.093						.532			
6304C-B-1032	6304C-SS-1032		.109-.140	1/8	.125						.500			
6304D-B-1032	6304D-SS-1032		.171-.203	3/16	.187						.438			
6304E-B-1032	6304E-SS-1032		.234-.265	1/4	.250						.375			
6305A-B-1224	6305A-SS-1224	12-24 UNC-2B	.052-.067	1/16	.062	5/8	.433	.375	.4210	17/32	.563	.096	.312	.228
6305B-B-1224	6305B-SS-1224		.084-.099	3/32	.093						.532			
6305C-B-1224	6305C-SS-1224		.109-.140	1/8	.125						.500			
6305D-B-1224	6305D-SS-1224		.171-.203	3/16	.187						.438			
6305E-B-1224	6305E-SS-1224		.234-.265	1/4	.250						.375			
6306A-B-2520	6306A-SS-2520	1/4-20 UNC-2B	.052-.067	1/16	.062	5/8	.433	.375	.4310	17/32	.563	.096	.312	.257
6306B-B-2520	6306B-SS-2520		.084-.099	3/32	.093						.532			
6306C-B-2520	6306C-SS-2520		.109-.140	1/8	.125						.500			
6306D-B-2520	6306D-SS-2520		.171-.203	3/16	.187						.438			
6306E-B-2520	6306E-SS-2520		.234-.265	1/4	.250						.375			
6307A-B-2528	6307A-SS-2528	1/4-28 UNF-2B	.052-.067	1/16	.062	5/8	.433	.375	.4310	17/32	.563	.096	.312	.257
6307B-B-2528	6307B-SS-2528		.084-.099	3/32	.093						.532			
6307C-B-2528	6307C-SS-2528		.109-.140	1/8	.125						.500			
6307D-B-2528	6307D-SS-2528		.171-.203	3/16	.187						.438			
6307E-B-2528	6307E-SS-2528		.234-.265	1/4	.250						.375			

RETAINER ASSEMBLY

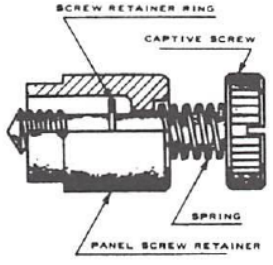

SPRING

MATERIAL:
- Stainless Steel Wire ASTM-A313
- 5 turns on a spring plus 1 flat turn each end.

NOTES:
- Part Number for panel retainer type 2B includes the retainer and the spring.
- Spring heights will vary as lengths change so as to insure constant and ample tension.

Part No. 5616 - SPRING (Miniature)
Use with 4-40 and 6-32



Part No. 5617 - SPRING (Standard)

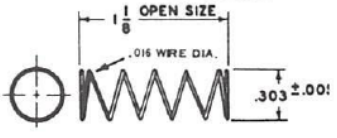

RETAINER RING

PLASTIC OR METAL

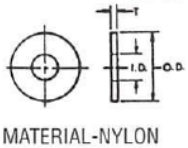

MATERIAL-NYLON

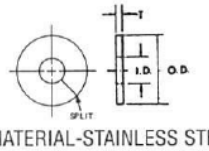

MATERIAL-STAINLESS STEEL
Note Type 301 per MS 5059 or QQS-766

PART NO.	THREAD SIZE	±.003 O.D.	±.003 I.D.	±.002 T
4382-1	4-40	.171	.100	.015
4382-2	6-32	.171	.125	.020
4382-3	8-32	.312	.152	.020
4382-4	10-24	.312	.167	.020
4382-5	10-32	.312	.173	.020
4382-6	12-24	.312	.193	.020
4382-7	1/4-20	.312	.228	.030
4382-8	1/4-28	.312	.228	.030

PART NO.	THREAD SIZE	±.002 O.D.	±.002 I.D.	±.002 T
4382-1-SS	4-40	.177	.092	.010
4382-2-SS	6-32	.177	.108	.010
4382-3-SS	8-32	.328	.146	.012
4382-4-SS	10-24	.328	.166	.012
4382-5-SS	10-32	.328	.166	.012
4382-6-SS	12-24	.328	.180	.012
4382-7-SS	1/4-20	.328	.204	.012
4382-8-SS	1/4-28	.328	.213	.012

METHOD OF INSTALLATION

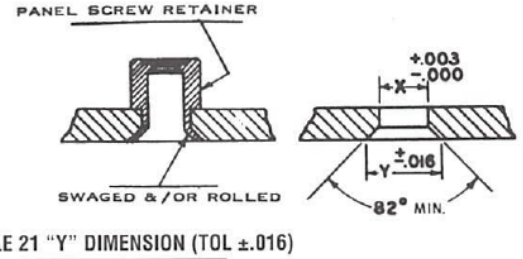

TABLE 21 "Y" DIMENSION (TOL ±.016)

SHANK DIA "C"	.250	.433
X DIA.	.257	.437
Y DIA.	.318	.498

NOTES: • 1-X Dim. per Table 21
• 2-X Hole to be drilled or punched

RULE OF THUMB FOR "Y" COUNTERSINK
Y = X + .045 Min
or .078 Max.

5 Pasco Hill Road • Cromwell, CT 06416-1093
Phone: 860-828-0847 • Call Toll Free: 800-243-6032 • Fax: 860-828-0381
Web Address: http://www.amatom.com • E-Mail: sales@amatom.com

PANEL SCREW RETAINER

(INSERT-SCREW THREAD-PANEL) Per FSC-5340-411

Type 3: These panel retainers are designed to be used with type 3 captive screws as listed on pages 72 and 73.

Material
- SS-Corrosive Resisting Steel (Stainless Steel): ASTM A581-75 thru 1/2 O.D. over 1/2 AMS-5762.
- B-Brass: QQ-B-626 Comp. 22 1/2 Hard.

Standard Finish
- For Corrosive Resisting Steel (SS): Passivate per QQ-P-35.
- For Brass (B): Nickel Plate per QQ-N-290 Grade G.

Threads
- UNC-2B and UNF-2B per National Bureau of Standards Handbook H28 titled "Screw-Thread Standards for Federal Services."

Workmanship
- To high precision standards.

Quality Control
- To MIL-STD-105. Made for use on Government Equipment.

TYPE 3 (Refer to Table 25)

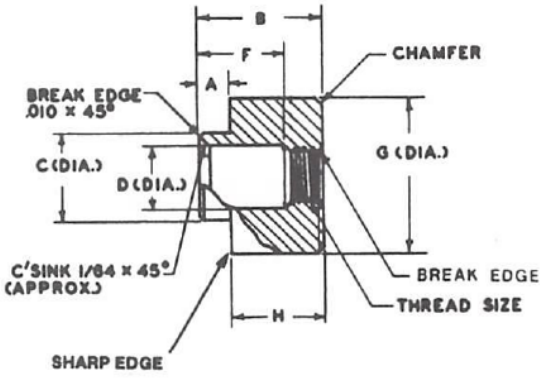

NOTES:
- Available in other materials on special order. Price on application.
- Any similar type captive panel retainer in any increment of body or thread size is available on special order. Price on application.
- CHAMFER - under 1/2 inch "G" dimension, chamfer is 1/64 x 45°. 1/2 inch "G" dimension and over, chamfer is 1/32 x 45°.

TABLE 17
CODE FOR SHANK LENGTH (A DIM.)

CODE	LENGTH OF SHANK	PANEL THICKNESS
A	.062	.052-.067
B	.093	.084-.099
C	.125	.109-.140
D	.187	.171-.203
E	.250	.234-.265

NOTE: For special shank lengths contact Amatom sales office for part numbers.

TABLE 25 - Type 3

PART NO./MATERIAL		THREAD SIZE	PANEL THICKNESS RANGE	NOMINAL PANEL SIZE	A ±.005	B REF. ±.010	C +.000 −.003	D ±.005	F ±.005	G ±.003	H ±.005
BRASS (B)	CRES (SS)										
6310A-B-0440	6310A-SS-0440	4-40 UNC-2B	.052-.067	1/16	.062	1/4	.188	.140	.1640	1/4	.188
6310B-B-0440	6310B-SS-0440		.084-.099	3/32	.093						.157
6310C-B-0440	6310C-SS-0440		.109-.140	1/8	.125						.125
6311A-B-0632	6311A-SS-0632	6-32 UNC-2B	.052-.067	1/16	.062	5/16	.188	.150	.2150	1/4	.250
6311B-B-0632	6311B-SS-0632		.084-.099	3/32	.093						.219
6311C-B-0632	6311C-SS-0632		.109-.140	1/8	.125						.187
6312A-B-0832	6312A-SS-0832	8-32 UNC-2B	.052-.067	1/16	.062	5/16	.218	.188	.2110	3/8	.250
6312B-B-0832	6312B-SS-0832		.084-.099	3/32	.093						.219
6312C-B-0832	6312C-SS-0832		.109-.140	1/8	.125						.187
6312D-B-0832	6312D-SS-0832		.171-.203	3/16	.187						.125

continued...

AMATOM®

PANEL SCREW RETAINER

(INSERT-SCREW THREAD-PANEL) Per FSC-5340-411

TABLE 25 - Type 3 (continued from previous page)

PART NO./MATERIAL		THREAD SIZE	PANEL THICKNESS RANGE	NOMINAL PANEL SIZE	A	B	C	D	F	G	H
BRASS (B)	CRES (SS)				±.005	REF. ±.010	+.000 −.003	±.005	±.005	±.003	±.005
6313A-B-1024	6313A-SS-1024		.052-.067	1/16	.062						.313
6313B-B-1024	6313B-SS-1024		.084-.099	3/32	.093						.282
6313C-B-1024	6313C-SS-1024	10-24 UNC-2B	.109-.140	1/8	.125	3/8	.270	.228	.2380	3/8	.250
6313D-B-1024	6313D-SS-1024		.171-.203	3/16	.187						.188
6313E-B-1024	6313E-SS-1024		.234-.265	1/4	.250						.125
6314A-B-1032	6314A-SS-1032		.052-.067	1/16	.062						.313
6314B-B-1032	6314B-SS-1032		.084-.099	3/32	.093						.282
6314C-B-1032	6314C-SS-1032	10-32 UNF-2B	.109-.140	1/8	.125	3/8	.270	.228	.2380	3/8	.250
6314D-B-1032	6314D-SS-1032		.171-.203	3/16	.187						.188
6314E-B-1032	6314E-SS-1032		.234-.265	1/4	.250						.125
6315A-B-1224	6315A-SS-1224		.052-.067	1/16	.062						.313
6315B-B-1224	6315B-SS-1224		.084-.099	3/32	.093						.282
6315C-B-1224	6315C-SS-1224	12-24 UNC-2B	.109-.140	1/8	.125	3/8	.270	.228	.2460	3/8	.250
6315D-B-1224	6315D-SS-1224		.171-.203	3/16	.187						.188
6315E-B-1224	6315E-SS-1224		.234-.265	1/4	.250						.125
6316A-B-2520	6316A-SS-2520		.052-.067	1/16	.062						.375
6316B-B-2520	6316B-SS-2520		.084-.099	3/32	.093						.344
6316C-B-2520	6316C-SS-2520	1/4-20 UNC-2B	.109-.140	1/8	.125	7/16	.356	.295	.2990	1/2	.312
6316D-B-2520	6316D-SS-2520		.171-.203	3/16	.187						.250
6316E-B-2520	6316E-SS-2520		.234-.265	1/4	.250						.187
6317A-B-2528	6317A-SS-2528		.052-.067	1/16	.062						.375
6317B-B-2528	6317B-SS-2528		.084-.099	3/32	.093						.344
6317C-B-2528	6317C-SS-2528	1/4-28 UNF-2B	.109-.140	1/8	.125	7/16	.356	.295	.2990	1/2	.312
6317D-B-2528	6317D-SS-2528		.171-.203	3/16	.187						.250
6317E-B-2528	6317E-SS-2528		.234-.265	1/4	.250						.187
*	*6318A-SS-3124		.052-.067	1/16	.062						.375
	*6318B-SS-3124		.084-.099	3/32	.093						.344
	*6318C-SS-3124	5/16-24 UNF-2B	.109-.140	1/8	.125	7/16	.404	.343	.3030	1/2	.312
	*6318D-SS-3124		.171-.203	3/16	.187						.250
	*6318E-SS-3124		.234-.265	1/4	.250						.187

*Part No. 6318 Available on special order. For other materials refer to CODE Page 66. Price on application.

TABLE 22 "Y" DIMENSION (TOL ±.016)

SHANK DIA "C"	.188	.218	.270	.356	.404
X DIA.	.191	.221	.272	.359	.407
Y DIA.	.252	.282	.333	.420	.468

RULE OF THUMB FOR "Y" COUNTERSINK
Y = X + .045 Min
or .078 Max.

METHOD OF INSTALLATION

NOTES: • 1-X Dim. per Table 22
• 2-X Hole to be drilled or punched

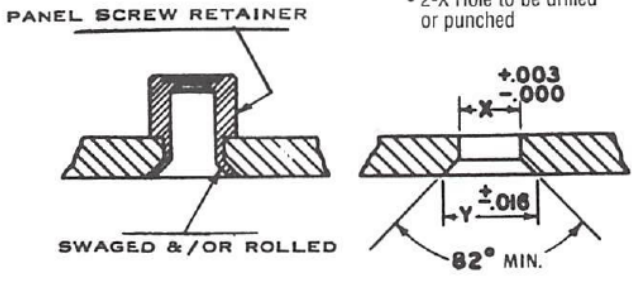

5 Pasco Hill Road • Cromwell, CT 06416-1093
Phone: 860-828-0847 • Call Toll Free: 800-243-6032 • Fax: 860-828-0381
Web Address: http://www.amatom.com • E-Mail: sales@amatom.com

PANEL SCREW RETAINER

(INSERT-SCREW THREAD-PANEL) Per FSC-5340-411

Type 3: These panel retainers are designed to be used with type 3 captive screws as listed on pages 72 and 73.

Material • SS-Corrosive Resisting Steel (Stainless Steel): ASTM A581-75 thru 1/2 O.D. over 1/2 AMS-5762.
• B-Brass: QQ-B-626 Comp. 22 1/2 Hard.

Standard Finish • For Corrosive Resisting Steel (SS): Passivate per QQ-P-35.
• For Brass (B): Nickel Plate per QQ-N-290 Grade G.

Threads • UNC-2B and UNF-2B per National Bureau of Standards Handbook H28 titled "Screw-Thread Standards for Federal Services."

Workmanship • To high precision standards.

Quality Control • To MIL-STD-105. Made for use on Government Equipment.

TYPE 3A (Refer to Table 27)

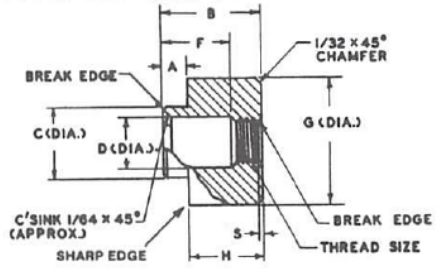

NOTES: • Available in other materials on special order. Price on application.
• Any similar type captive panel retainer in any increment of body or thread size is available on special order. Price on application.

TABLE 26

CODE FOR SHANK LENGTH (A DIM.)

CODE	LENGTH OF SHANK	PANEL THICKNESS
A	–	.052-.067
B	–	.084-.099
C	.165	.109-.140
D	.230	.171-.203
E	.290	.234-.265

NOTE: For special shank lengths contact Amatom sales office for part numbers.

METHOD OF INSTALLATION

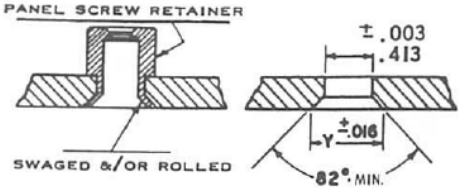

NOTES: Panel Hole - .413 Dim. to be drilled or punched.
(See Table 26A for "Y" Dim.)

TABLE 26A

SHANK DIA "C"	.407
X DIA.	.413
Y DIA.	.468

TABLE 27 - Type 3A

PART NO./MATERIAL		THREAD SIZE	PANEL THICKNESS RANGE	NOMINAL PANEL SIZE	A ±.005	B REF. ±.010	C +.000 −.003	D ±.005	F ±.005	G ±.003	H ±.005
BRASS (B)	CRES (SS)										
6320C-B-0632	6320C-SS-0632	6-32 UNC-2B	.109-.140	1/8	.165	.477	13/32	11/32	.2280	9/16	.312
6320D-B-0632	6320D-SS-0632		.171-.203	3/16	.230	.542			.2930		
6320E-B-0632	6320E-SS-0632		.234-.265	1/4	.290	.602			.3530		
6321C-B-0832	6321C-SS-0832	8-32 UNC-2B	.109-.140	1/8	.165	.477	13/32	11/32	.2360	9/16	.312
6321D-B-0832	6321D-SS-0832		.171-.203	3/16	.230	.542			.3010		
6321E-B-0832	6321E-SS-0832		.234-.265	1/4	.290	.602			.3610		
6322C-B-1032	6322C-SS-1032	10-32 UNF-2B	.109-.140	1/8	.165	.477	13/32	11/32	.2440	9/16	.312
6322D-B-1032	6322D-SS-1032		.171-.203	3/16	.230	.542			.3090		
6322E-B-1032	6322E-SS-1032		.234-.265	1/4	.290	.602			.3690		
6323C-B-1224	6323C-SS-1224	12-24 UNC-2B	.109-.140	1/8	.165	.477	13/32	11/32	.2520	9/16	.312
6323D-B-1224	6323D-SS-1224		.171-.203	3/16	.230	.542			.3170		
6323E-B-1224	6323E-SS-1224		.234-.265	1/4	.290	.602			.3770		
6324C-B-2520	6324C-SS-2520	1/4-20 UNC-2B	.109-.140	1/8	.165	.477	13/32	11/32	.2620	9/16	.312
6324D-B-2520	6324D-SS-2520		.171-.203	3/16	.230	.542			.3270		
6324E-B-2520	6324E-SS-2520		.234-.265	1/4	.290	.602			.3870		

5 Pasco Hill Road • Cromwell, CT 06416-1093
Phone: 860-828-0847 • Call Toll Free: 800-243-6032 • Fax: 860-828-0381
Web Address: http://www.amatom.com • E-Mail: sales@amatom.com

AMATOM®

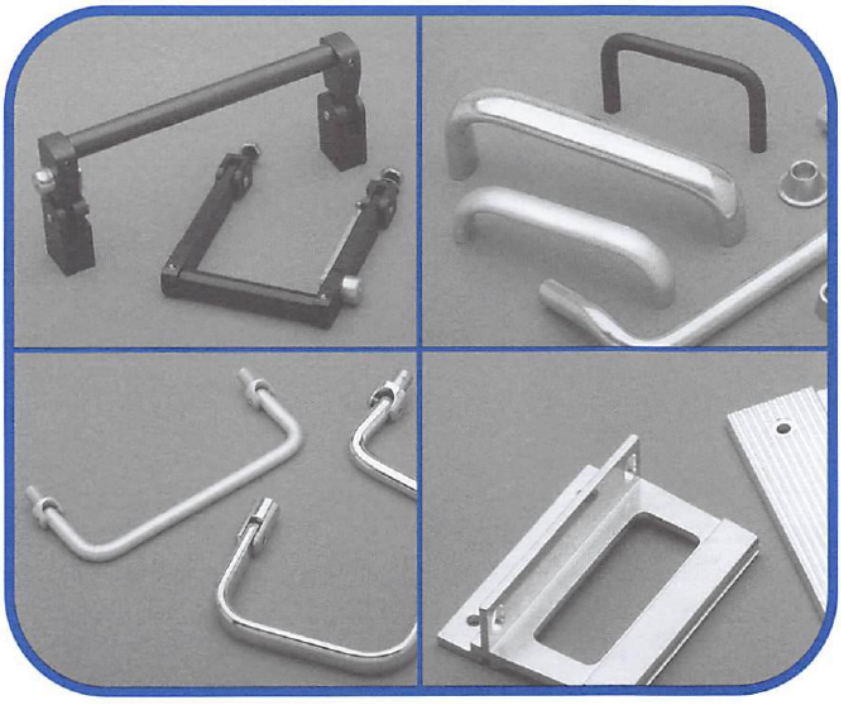

RACK HANDLES
FERRULES
CONTEMPORARY HANDLES
HIGH-TECH HANDLES
POSITIVE LOCKING HANDLES

ELECTRONIC HARDWARE
REFERENCE MANUAL

Call Toll Free
From anywhere in the USA Call Cromwell, CT **1-800-243-6032**

AMATOM ELECTRONIC HARDWARE
5 Pasco Hill Road
Cromwell, CT 06416-1093
860-828-0847
Fax: 860-828-0381
E-Mail: sales@amatom.com
Web Address: http://www.amatom.com

HANDLES AND FERRULES

This section on Rack Handles and Ferrules includes the following listed categories of styles, types, mounting centers, heights, threads and materials.

RACK HANDLES

Style	Page	Diameter or Material Size	Height	Mounting Centers	Material	Threads
ROUND - INTERNAL THREAD 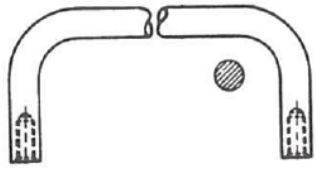	104	1/8	1/2" to 2"	3/4" to 3"	A-B-S-SS	2/56
	105	5/32	3/4" to 1"	1" to 3"	A-B-S-SS	2/56 - 4/40
	106	3/16	5/8" to 1-1/2"	1" to 5"	A-B-S-SS	4/40 - 6/32
	107	1/4	1" to 4-1/4"	1-1/8" to 8"	A-B-S-SS	6/32 - 8/32
	108-109	5/16	1" to 7"	2" to 12"	A-B-S-SS	8/32 -10/32
	110-111	3/8	1-5/16" to 4"	2" to 12"	A-B-S-SS	10/32 - 1/4-20
	112	1/2	2"	4" to 10"	A-B-S-SS	10/32 - 1/4-20 5/16-18
ROUND - EXTERNAL THREAD NO SHOULDER 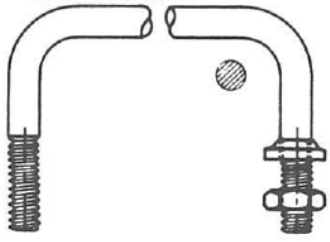	113	5/16	2-1/8"	3" to 9"	A-B-S-SS	5/16-18
	114	3/8	2-1/8"	3" to 9"	A-B-S-SS	3/8-24
	Ferrules and Nuts are Supplied					
ROUND - EXTERNAL THREAD WITH SHOULDER 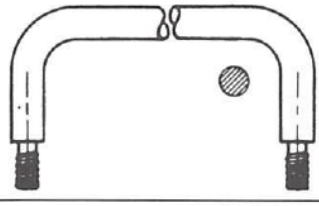	115	3/16	1" to 2"	2" to 6"	A-B-S-SS	4/40 - 6/32
	116	1/4	1" to 2"	2" to 6"	A-B-S-SS	8/32 - 10/32
	117	5/16	1-13/16" to 2-1/4"	2" to 9"	A-B-S-SS	10/32 - 1/4-20
	Nuts and Washers not Supplied					
HANDLE - OVAL INTERNAL THREAD 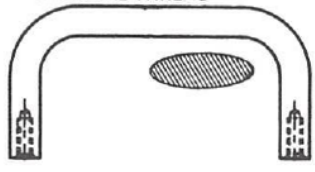	118	7/16 x 9/32	1" to 2"	2" to 12"	A-B-SS	8/32 - 10/24 10/32
	119-120	5/8 x 9/32	1" to 4"	2-1/2" to 12"	A-B-SS	8/32 - 10/24 10/32
	121	5/8 x 3/8	1-9/32" to 3"	2-1/2" to 12"	A-B-SS	8/32 - 10/24 10/32
HALF ROUND INTERNAL THREAD 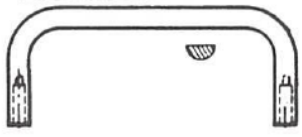	122	5/8 x 5/16	1-9/32" to 2"	3" to 9"	A-B	10/24 - 10/32

5 Pasco Hill Road • Cromwell, CT 06416-1093
Phone: 860-828-0847 • Call Toll Free: 800-243-6032 • Fax: 860-828-0381
Web Address: http://www.amatom.com • E-Mail: sales@amatom.com

AMATOM®

Index Handles

Page	Diameter or Material Size	Height	Mounting Centers	Material	Threads	Style
123	1/2 x 3/16	1-1/2" to 2"	2" to 10"	Alum	4/40 - 6/32	RECTANGULAR INTERNAL THREAD
124	1/2 x 1/4	1-1/2" to 2"	2" to 10"	A-B	6/32 - 8/32	
125	1/2 x 5/16	1" to 2"	2" to 10"	A-B	8/32 -10/32	
126	5/8 x 1/4	1" to 4"	2" to 10"	A-B	6/32 - 8/32	
127	1 x 1/4	1" to 4"	2" to 10"	A-B	6/32 - 8/32	
128	1/4	1.46"	3" to 6"	A-B-SS-S	1/4-28 - 5/16-24	ROUND - 90° FREE FALL EXTERNAL THREAD
129	5/16	1.53" to 1.81"	3" to 6"	A-B-SS-S	5/16-24 - 3/8-24	
130	3/8	1.53" to 1.85"	3" to 6"	A-B-SS-S	5/16-24 - 3/8-24	
	Nuts and Washers are Supplied					
131	1/4	1.46"	3" to 6"	A-B-SS-S	1/4-28 - 5/16-24	ROUND - 180° FREE FALL EXTERNAL THREAD
132	5/16	1.53" to 1.81"	3" to 6"	A-B-SS-S	5/16-24 - 3/8-24	
	Nuts and Washers are Supplied					
133	1/4	1.46"	3" to 9"	A-B-SS-S	1/4-28 - 5/16-24	ROUND - 90° INFINITE POS. FOLDING HANDLE EXTERNAL THREAD
134	5/16	1.62"	3" to 9"	A-B-SS-S	5/16-24 - 3/8-24	
135	3/8	1.81"	3" to 9"	A-B-SS-S	5/16-24 - 3/8-24	
	NOTE: 1/4 OD Handle with 7/16" OD Ferrule, Washers and Nuts Supplied 5/16 OD Handle with 9/16" OD Ferrule, Washers and Nuts Supplied 3/8 OD Handle with 5/8" OD Ferrule, Washers and Nuts Supplied					
136	1/4	1.46"	3" to 9"	A-B-SS-S	1/4-28 - 5/16-24	ROUND - 180° INFINITE POS. FOLDING HANDLE EXTERNAL THREAD
137	5/16	1.62"	3" to 9"	A-B-SS-S	5/16-24 - 3/8-24	
138	3/8	1.81"	3" to 9"	A-B-SS-S	5/16-24 - 3/8-24	
	NOTE: 1/4 OD Handle with 7/16" OD Ferrule, Washers and Nuts Supplied 5/16 OD Handle with 9/16" OD Ferrule, Washers and Nuts Supplied 3/8 OD Handle with 5/8" OD Ferrule, Washers and Nuts Supplied					
139	1/4	1.43" to 1.46"	3" to 9"	A-B-SS-S	1/4-28 - 5/16-24	ROUND - 90° FOLDING 2 POS. EXTERNAL THREAD
140	5/16	1.53" to 1.84"	3" to 9"	A-B-SS-S	5/16-24 - 3/8-24	
141	3/8	1.53" to 2.37"	3" to 9"	A-B-SS-S	5/16-24 - 3/8-24	
	Nuts and Washers are Supplied					

5 Pasco Hill Road • Cromwell, CT 06416-1093
Phone: 860-828-0847 • Call Toll Free: 800-243-6032 • Fax: 860-828-0381
Web Address: http://www.amatom.com • E-Mail: sales@amatom.com

Index Handles

Style	Page	Diameter or Material Size	Height	Mounting Centers	Material	Threads
ROUND - 180° FOLDING 3 POS. EXTERNAL THREAD 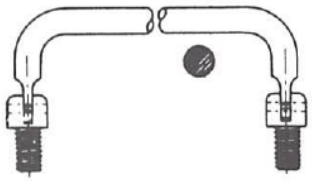	142	1/4	1.43" to 1.46"	3" to 8"	A-B-SS-S	1/4-28 - 5/16-24
	143	5/16	1.43" to 1.85"	3" to 8"	A-B-SS-S	1/4-28 - 3/8-24
	144	3/8	1.53" to 2.37"	3" to 8"	A-B-SS-S	5/16-24 - 3/8-24
	Nuts and Washers are Supplied					
OVAL - 90° FOLDING 2 POS. EXTERNAL THREAD 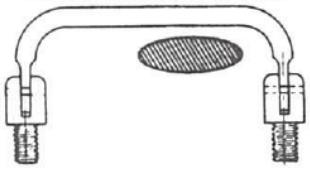	145	7/16 x 9/32	1.695" to 2-1/8"	3" to 8"	A-B-SS	5/16-24 - 3/8-24
	146	5/8 x 9/32	1.695" to 2-1/8"	3" to 8"	A-B-SS	5/16-24 - 3/8-24
	147	5/8 x 3/8	1.695" to 2-1/8"	3" to 8"	A-B	5/16-24 - 3/8-24
	Nuts and Washers are Supplied					
OVAL - 180° FOLDING 3 POS. EXTERNAL THREAD 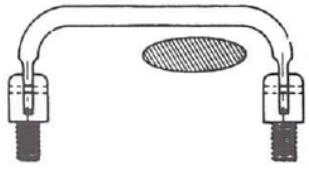	148	7/16 x 9/32	1.695" to 2-1/8"	3" to 8"	A-B-SS	5/16-24 - 3/8-24
	149	5/8 x 9/32	1.695" to 2-1/8"	3" to 8"	A-B-SS	5/16-24 - 3/8-24
	150	5/8 x 3/8	1.695" to 2-1/8"	3" to 8"	A-B	5/16-24 - 3/8-24
	Nuts and Washers are Supplied					
OVAL - 180° FOLDING INFINITE POS. INTERNAL THREAD 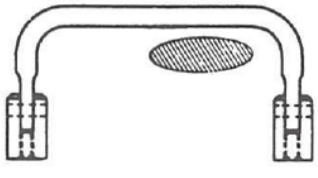	151	7/16 x 9/32	2" to 3"	2" to 8"	A-B-SS	8/32 - 10/32
	152	5/8 x 9/32	2" to 3"	2" to 8"	A-B-SS	8/32 - 10/32
	153	5/8 x 3/8	2" to 3"	2" to 8"	A-B	8/32 - 10/32

5 Pasco Hill Road • Cromwell, CT 06416-1093
Phone: 860-828-0847 • Call Toll Free: 800-243-6032 • Fax: 860-828-0381
Web Address: http://www.amatom.com • E-Mail: sales@amatom.com

Index Handles

Page	Diameter or Material Size	Height	Mounting Centers	Material	Threads	Style
154	1/2 x 3/16	1-1/2" to 2-1/2"	3" to 10"	A-B	8/32 - 10/32	RECTANGULAR - 180° FOLDING INFINITE POS. INTERNAL THREAD 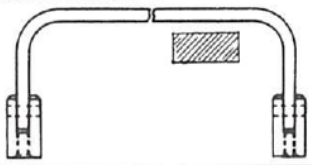
155	3/16	1" to 1-1/2"	2" to 6"	A-B-SS-S	4/40 - 6/32	ROUND - OFFSET INTERNAL THREAD 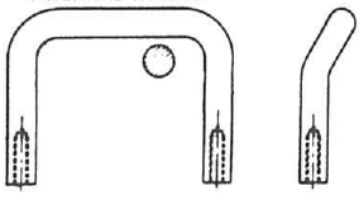
156	1/4	1" to 2"	2" to 6"	A-B-SS-S	6/32 - 8/32	
157	5/16	1-5/16" to 2-1/2"	2" to 10"	A-B-SS-S	8/32 - 10/32	
158	3/8	1-3/4" to 2-1/2"	3" to 10"	A-B-SS-S	8/32 - 10/32	
NOTE: External Thread available on special order						
159	7/16 x 9/32	1-1/2" to 2"	3" to 10"	A-B-SS	10/24 - 10/32	OVAL - SLANTED INTERNAL THREAD 
160	5/8 x 9/32	1-1/2" to 2"	3" to 10"	A-B-SS	10/24 - 10/32	
161	5/8 x 3/8	1-1/2" to 2"	3" to 10"	A-B	10/24 - 10/32	
NOTE: Stainless Steel - Special order only						
162	5/16	1-1/2" to 2"	3" to 7"	A-B-SS	8/32 - 10/32	ROUND - SLANTED 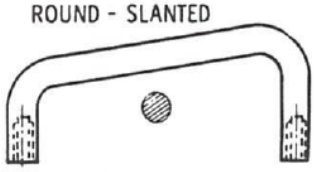
163	3/8	1-1/2" to 2"	3" to 7"	A-B-SS	8/32 - 10/32	
164	17/32 x 9/32	3/4" to 1-7/8"	2" to 14-3/4"	Alum	8/32 - 10/32	BAR EXTRUSION ANODIZED ALUM. INSERT 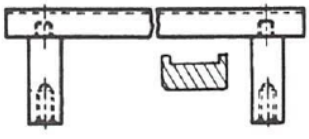
165	17/32 x 9/32	1" to 1-1/8"	2" to 14-3/4"	Alum	8/32 - 10/32	
166	17/32 x 9/32	1-3/16" to 1-7/16"	2" to 14-3/4"	Alum	8/32 - 10/32	
167	5/16	2"	3" to 7"	A-B-SS-S	8/32 - 10/32	ROUND - 90° FOLDING FREE FALL - INTERNAL THD 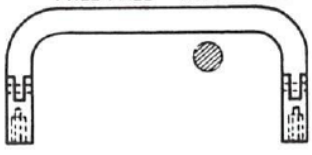
168	3/8	2"	3" to 7"	A-B-SS-S	8/32 - 10/32	

5 Pasco Hill Road • Cromwell, CT 06416-1093
Phone: 860-828-0847 • Call Toll Free: 800-243-6032 • Fax: 860-828-0381
Web Address: http://www.amatom.com • E-Mail: sales@amatom.com

AMATOM®

Contemporary, High-tech and Positive Locking Folding Handles

CONTEMPORARY HANDLES

Style 1
Rack Mount Handle

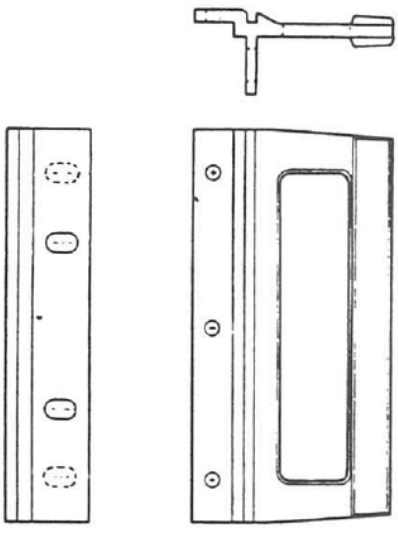

ALUMINUM PAGE 173

Style 2
Extruded Grip Handle

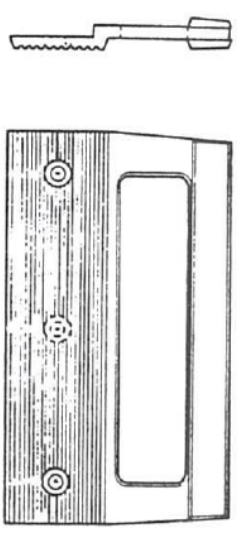

ALUMINUM PAGE 173

Style 3

Style 4

Style 5

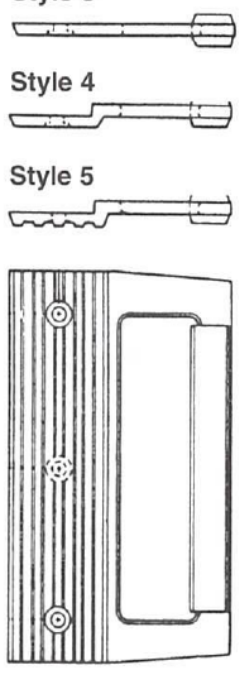

ALUMINUM PAGE 174

POSITIVE LOCKING FOLDING HANDLES

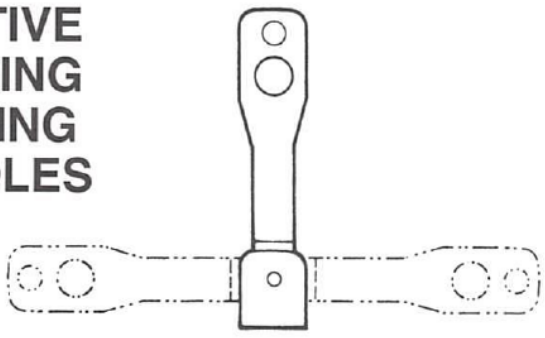

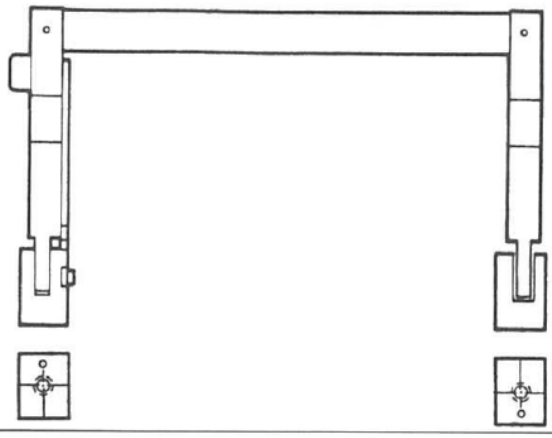

ALUMINUM PAGE 177-178

HIGH-TECH HANDLES

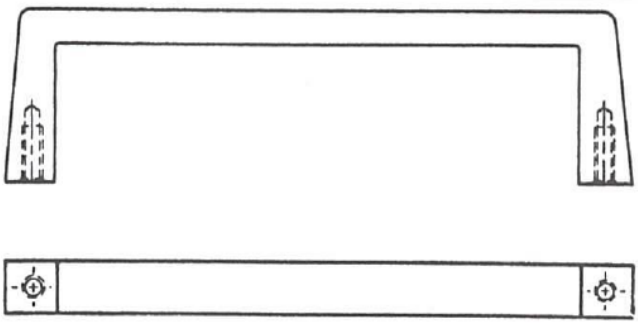

ALUMINUM PAGE 175

5 Pasco Hill Road • Cromwell, CT 06416-1093
Phone: 860-828-0847 • Call Toll Free: 800-243-6032 • Fax: 860-828-0381
Web Address: http://www.amatom.com • E-Mail: sales@amatom.com

AMATOM®

Index Ferrules

Ferrules are made in five different styles, in aluminum, brass, steel and stainless steel.
The following chart will show the style ferrule that is available for various style handles (normally stocked.)
Special ferrules to your design made on special order only - price on application.

Page	Handle Diameter	Ferrule Diameter	Material	Finish	Style
169	5/16	3/4	A-B-SS-S	See Chart E Page 102	 STYLE 1
169	1/4 5/16 3/8	5/8 3/4 3/4	A-B-SS-S A-B-SS-S A-B-SS-S	See Chart E Page 102	 STYLE 2
169	5/16-18 3/8-24	5/8 3/4	A-B-SS-S A-B-SS-S	See Chart E Page 102	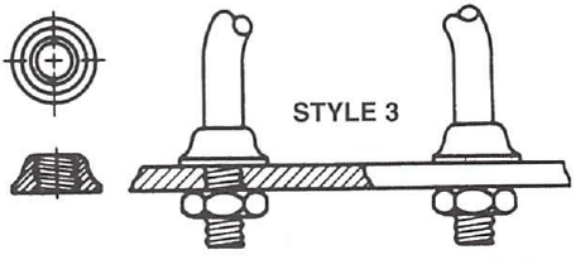 STYLE 3
170	1/8 5/32 3/16 1/4 1/4 1/4 5/16 5/16 3/8 1/2	1/4 1/4 5/16 3/8 7/16 1/2 15/32 9/16 5/8 3/4	A-B-SS-S A-B-SS-S A-B-SS-S A-B-SS-S A-B-SS-S A-B-SS-S A-B-SS-S A-B-SS-S A-B-SS-S A-B-SS-S	See Chart E Page 102	 STYLE 4
170	5/16 3/8 1/2	9/16 5/8 3/4	A-B-SS-S A-B-SS-S A-B-SS-S	See Chart E Page 102	 STYLE 5

5 Pasco Hill Road • Cromwell, CT 06416-1093
Phone: 860-828-0847 • Call Toll Free: 800-243-6032 • Fax: 860-828-0381
Web Address: http://www.amatom.com • E-Mail: sales@amatom.com

AMATOM®

Part Number Code and Specifications

PVC COATED GRIP

Amatom can now supply a black plastisol coating (PVC) on handles for a comfortable grip – especially for heavy equipment. It is a seamless, heavy duty, resilient, heat-fused coating. 70 Shore A durometer; heat resistance of 75°C constant; di-electric of 300 volts/mil with good weatherability and exceeds military specifications of Mil-P-20689A

Finish Code
38a - 1/16" total coating added to diameter – 1/32" per side
38b - 1/8" total coating added to diameter – 1/16" per side
38c - 3/16" total coating added to diameter – 3/32" per side

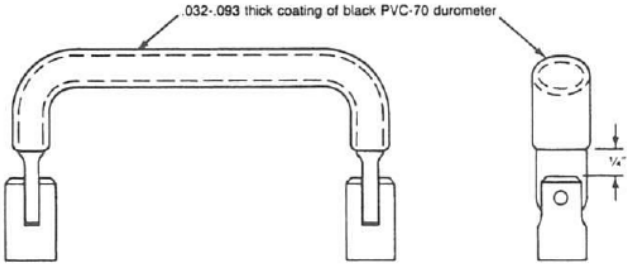

O-RINGS

Amatom can supply an O-ring for sealing for all internal and external thread folding handles. Catalog pages 128-150.

O-rings are Nitrite (Buna N) per Mil-P-25732 and conform to MS-28775.

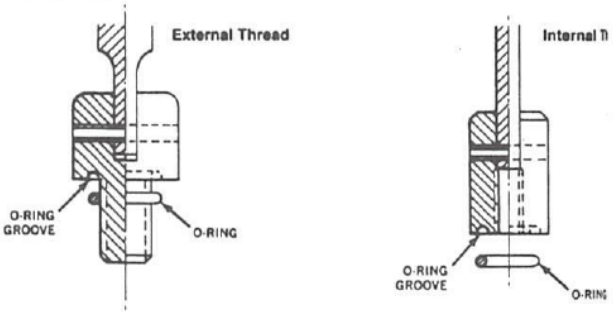

For an Amatom listed handle size – select part number that you need and add "Modified O-ring" to number. For sizes not listed, send in print and we will quote to your print.

NOTE: Not all folding handles can be modified for O-rings. Consult with factory before selecting handle part number.

OPTIONAL NEOPRENE GRIPS

Optional neoprene grips may be specified with any of above handle families by adding the code listed in the chart after the part number and before the finish code.

EXAMPLES: 80428-2N
80461-3N

CODE	FOR HANDLE STOCK	NEOPRENE
2N	1/2"	3/4"
3N	1/2"	1"
TOL + 1/31"		

NOTE: Grip length is determined by the length of the handle. Grip will end at the beginning of the radius of the bend. Tolerance on grip length is ± .031.

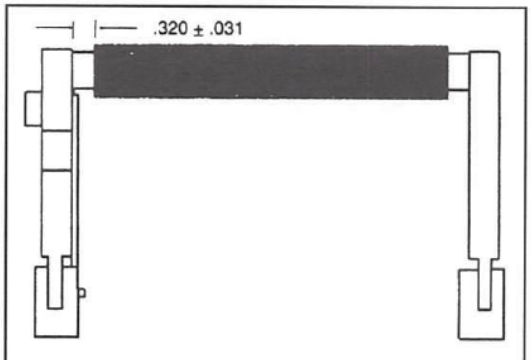

Available for all Standard, Compact and Low Profile Locking handles.

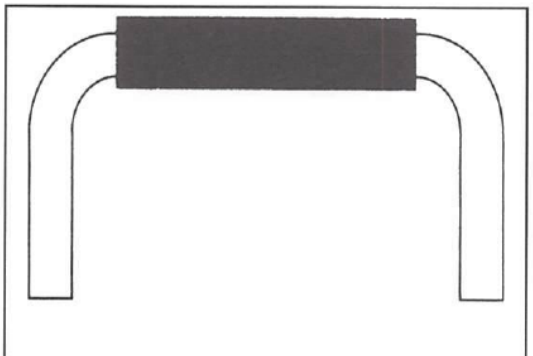

Available for 1/2" Round Handles only.

5 Pasco Hill Road • Cromwell, CT 06416-1093
Phone: 860-828-0847 • Call Toll Free: 800-243-6032 • Fax: 860-828-0381
Web Address: http://www.amatom.com • E-Mail: sales@amatom.com

AMATOM®

Part Number Code and Specifications

TOLERANCES

MACHINING TOLERANCES
Decimals ± .005 H = ±1/32 L = ±1/64 Angles ±1°

FABRICATING TOLERANCES – "H" & "L" dimensions
+3/64 –1/32 Angles ±3°

The dimensions as listed in this manual are functional. Amatom's hardware is inspected Per Mil-STD-105 during production and rechecked before shipment. Amatom reserves the right to make adjustments in dimensions and specifications at any time without notice. Customer's inspection should be determined primarily on functionality.

Chart A

Material	Code Letter	Material Specifications
Brass	B	Alloy 353 ASTM B16
Aluminum	A	[1]QQ-A-225/3 (2011-T3) QQ-A-200/8 QQ-A-225/6 (2024-T4) [2]QQ-A-225/8 (6061-T6) QQ-A-200/9 (6063-T5)-6005-T5
Stainless Steel Non-Magnetic	SS	203 (XM-1) ASTM A582 [2]304 QQ-S-763 comp 304
Steel	S	QQ-S-637

Notes:
1. Depending upon application.
2. Oval handles

DEPTH OF THREAD

Recommended Blind Hole Thread
Per Handbook H-28 (Part 1)
Screwthread Standards (Federal)

Chart B

Thread Size	Screw Engagement	Thread Size	Screw Engagement
0-80	3/16	12-24	9/16
2-56	3/16	1/4-20	9/16
3-48	1/4	1/4-28	9/16
4-40	1/4	5/16-18	9/16
6-32	3/8	3/8-16	9/16
8-32	7/16	3/8-32	9/16
10-24	9/16	7/16-20	9/16
10-32	9/16	1/2-20	5/8

NOTE: For all handles with 10-24 and larger threads and for oval and rectangular handles with 8-32 and larger threads, depth of thread will be 5/16 minimum, when height of leg is 1" and under. Charts will be noted.

THREAD CODE

Per handbook H-28 (Part 1) Screw Thread Standards (Federal)
Thread code is the 4 digit number assigned to the part number to designate the thread size of the part. All threads are Class 2A and 2B (commercial).

Chart C

Thread Size	AMATOM Thread Code	Thread Size	AMATOM Thread Code	Thread Size	AMATOM Thread Code
0-80	0080	5-44	0544	1/4-32	2532
1-64	0164	6-32	0632	5/16-18	3118
1-72	0172	6-40	0640	5/16-24	3124
2-56	0256	8-32	0832	3/8-16	3716
2-64	0264	8-36	0836	3/8-24	3724
3-48	0348	10-24	1024	3/8-32	3732
3-56	0356	10-32	1032	7/16-14	4314
4-40	0440	12-24	1224	7/16-20	4320
4-48	0448	1/4-20	2520	1/2-13	5013
5-40	0540	1/4-28	2528	1/2-20	5020

Note: For special threads, contact Amatom Sales office for number.

PERCENTAGE OF THREAD

Chart D

SCREW THREAD SIZE	% OF THREAD ALLOWABLE	
	ROLL OR COLD FORM TAP	CUT TAP
2	55	56
4	55	57
6	55	66
8	55	58
10	55	59
12	55	63
1/4	55	67

Note: Parts will be made by both methods and are interchangeable, unless customer specifically requests otherwise.

5 Pasco Hill Road • Cromwell, CT 06416-1093
Phone: 860-828-0847 • Call Toll Free: 800-243-6032 • Fax: 860-828-0381
Web Address: http://www.amatom.com • E-Mail: sales@amatom.com

PLEASE READ THIS CAREFULLY

EXPLANATION OF AMATOM PART NUMBERS

10XXX – X – XXXX – XX

- **10XXX** — This number indicates the style, height and mounting centers of the handle – from catalog charts.
- **X** — This letter indicates the material from which the part is made. See Chart No. A on page 101.
- **XXXX** — This number designates the thread size. See Chart No. C on page 101.
- **XX** — This number designates the finish of the part. Customer must add this number. See Chart E below.

FINISHES AVAILABLE
CHART E

0	No Finish
1B	Anodize-Mil-A-8625 Type 2 (Sulphuric) Hot Water Seal (Clear)
1C	Anodize-Mil-A-8625 Type 2 (Sulphuric) Dichromate Seal (Yellow/Green)
2	Anodize-Mil-A-8625 Black
2A	Brushed Satin Finish
2B	Satin Finish Clear Anodized
2C	Satin Finish Black Anodized
2E	Brushed Satin Finish Clear Anodized
2F	Brushed Satin Finish Black Anodized
4	Nickel Plate QQN-290 A Grade G (MS Handles Grade E)
4A	Polished and Nickel Plate
6A	Brass Ebonal "C" (Black) Mil-F-495E
6B	Stainless Steel "Black Oxide" Mil-C-13924
7	Passivate-QQ-P-35
8	Caustic Etch
9	Caustic Etch and Lacquer
10	Alodine 1200
16	Iridite-Clear-Mil-C-5541
17	Iridite-Gold-Mil-C-5541
25	Chromium Plate (Bright Finish) QQ-C-320 Class I Type I
25A	Chromium Plate (Satin Finish) QQ-C-320 Class I Type II
35	Anodize Mil-A-8625 Black High Lustre
*36	Electro static applied Black Epoxy Finish
38	Black Plastisol (PVC) Coating 70 Shore A exceeds Mil-P-20689A
38A	1/16" total added to diameter of material 1/32" per side
38B	1/8" total added to diameter of material 1/16" per side
38C	3/16" total added to diameter of material 3/32" per side

*Finish 36 can be supplied in colors – special order only.

See page 103 for additional Information.

5 Pasco Hill Road • Cromwell, CT 06416-1093
Phone: 860-828-0847 • Call Toll Free: 800-243-6032 • Fax: 860-828-0381
Web Address: http://www.amatom.com • E-Mail: sales@amatom.com

AMATOM®

Handles
Finishing Note

Special Alert

COLORS

BLACK - RED - BLUE - GREEN
YELLOW - BROWN - CREAM - GREY
WHITE – Plus Many More*

Gloss • Semi-Gloss • Satin • Matte
****Other colors availabe on request.***

EPOXY ADVANTAGES

- **Hardness**
- **Corrosion Resistant**
- **Resists Humidity and Salt Spray**
- **Color Retention**
- **Oxidation Protection**
- **Resists Melting Under High Temperatures**
- **Color Match to Cabinets or Panels**
- **Electrostatically Applied**

Contact Amatom Sales Office For Your Updated Powder Coat Chart

TYPICAL SPECIFICATIONS AND PROPERTIES

Handle material	Aluminum, brass, steel or stainless steel
Application of epoxy	Electrostatically applied
Cross hatch adhesion ASTM D2571	100% pass
Flexibility 1/4" mandrel	180°F
Pencil Hardness	2H-4H
Impact, direct and indirect ASTM G14	100 in. lbs.
Taber abrasion	Lost 1000/cycles
Values range	36 to 95 mg
Humidity (100% at 95° to 100°F) ASTM D2247	500 hours-no change 1000 hours-less than 1.0 mm undercutting from scribe
Salt spray (5% solution at 95° to 100°F) ASTMB117	2000 hours (unscribed)-no effect

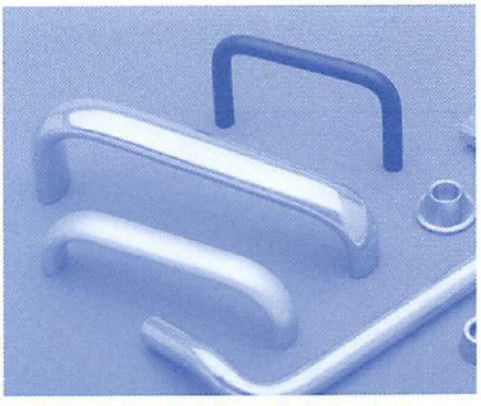

The performance characteristics of this chart vary according to application, operating conditions and materials applied. Amatom believes this information to be accurate, but since test methods can vary, their validity cannot be verified. This chart is compiled for information purposes only.

5 Pasco Hill Road • Cromwell, CT 06416-1093
Phone: 860-828-0847 • Call Toll Free: 800-243-6032 • Fax: 860-828-0381
Web Address: http://www.amatom.com • E-Mail: sales@amatom.com

1/8" ROUND HANDLES INTERNAL THREADS

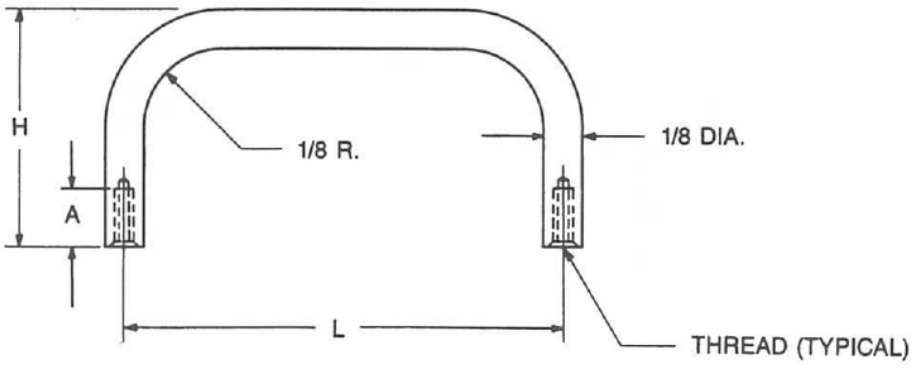

Refer to page 102 for Finish Codes.

PART NO.	L ± 1/64	H ± 1/32
10010	3/4	1/2
10011	13/16	
10012	7/8	
10013	1"	
10014	1-1/4	
10015	1-1/2	
10016	2"	
10020	3/4	3/4
10021	13/16	
10022	7/8	
10023	1"	
10024	1-1/4	
10025	1-1/2	
10026	2"	
10030	1"	1"
10031	1-1/4	
10032	1-1/2	
10033	1-3/4	
10034	2"	

PART NO.	L ± 1/64	H ± 1/32
10038	1"	1-1/4
10039	1-1/4	
10040	1-1/2	
10041	1-3/4	
10042	2"	
10045	1"	1-1/2
10046	1-1/4	
10047	1-1/2	
10048	1-3/4	
10049	2"	
10052	1-1/4	2"
10053	1-1/2	
10054	1-3/4	
10055	2"	
10056	2-1/2	
10057	3"	

PART NUMBER ORDERING SYSTEM

XXXXX - X - XXXX - XX

PART NO. | MATERIAL | THREAD | FINISH

THREAD CODE & DEPTH		
THREAD	CODE	A
2-56	0256	3/16

MATERIAL	CODE
Aluminum	A
Brass	B
Stainless Steel	SS
Steel	S

NOTE:
Metric size dimensions and threads available.
Please contact Sales Office.

5 Pasco Hill Road • Cromwell, CT 06416-1093
Phone: 860-828-0847 • Call Toll Free: 800-243-6032 • Fax: 860-828-0381
Web Address: http://www.amatom.com • E-Mail: sales@amatom.com

5/32" ROUND HANDLES INTERNAL THREADS

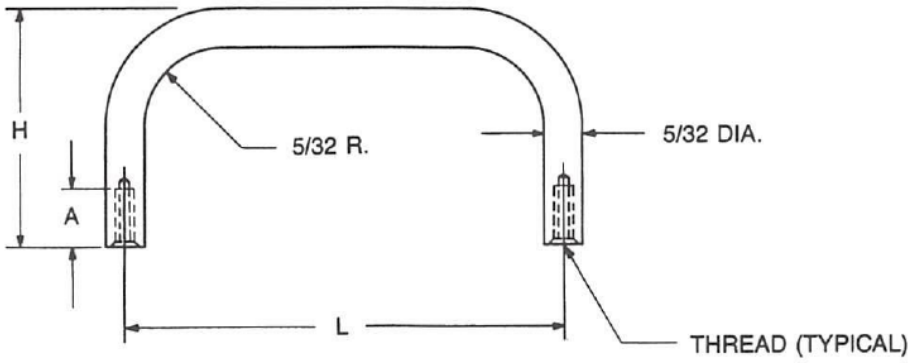

Refer to page 102 for Finish Codes.
For MS39087 equivalents see page 271.

PART NO.	L ± 1/64	H ± 1/32
10090	1"	3/4
10091	1-1/4	
10092	1-1/2	
10093	2"	
10094	2-1/2	
10095	3"	
10100	1"	1"
10101	1-1/4	
10102	1-1/2	
10103	1-3/4	
10104	2"	
10105	2-1/2	
10106	3"	

PART NUMBER ORDERING SYSTEM

XXXXX - X - XXXX - XX

PART NO. | MATERIAL | THREAD | FINISH

THREAD CODE & DEPTH		
THREAD	CODE	A
2-56	0256	3/16
4-40	0440	1/4-3/8

MATERIAL	CODE
Aluminum	A
Brass	B
Stainless Steel	SS
Steel	S

NOTE:
Metric size dimensions and threads available.
Please contact Sales Office.

5 Pasco Hill Road • Cromwell, CT 06416-1093
Phone: 860-828-0847 • Call Toll Free: 800-243-6032 • Fax: 860-828-0381
Web Address: http://www.amatom.com • E-Mail: sales@amatom.com

3/16" ROUND HANDLES INTERNAL THREADS

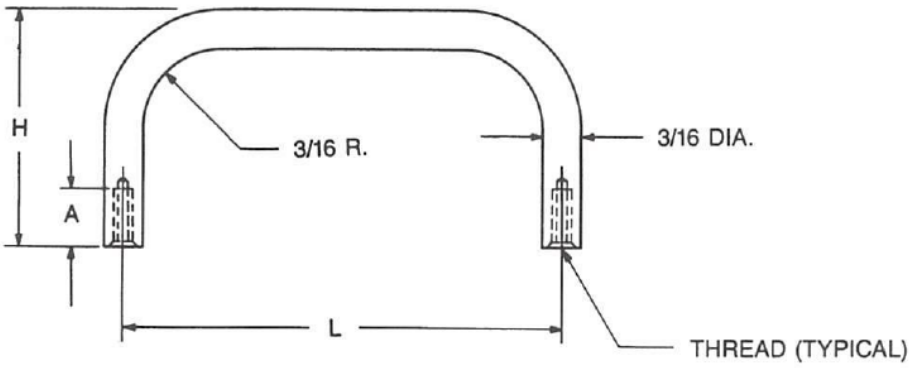

PART NO.	L ± 1/64	H ± 1/32
10110	1-1/2	
10111	1-3/4	
10112	2"	
10113	3"	5/8
10114	4"	
10115	5"	
10116	5-1/4	
10120	1"	
10121	1-1/4	
10122	1-1/2	
10123	1-3/4	
10124	2"	3/4
10125	3"	
10126	4"	
10127	5"	
10130	1"	
10131	1-1/4	
10132	1-1/2	
10133	1-3/4	
10134	2"	7/8
10135	3"	
10136	4"	
10137	5"	
10140	1"	
10141	1-1/4	
10142	1-1/2	
10143	1-3/4	
10144	2"	1"
10145	3"	
10146	4"	
10147	5"	

PART NO.	L ± 1/64	H ± 1/32
10150	1"	
10151	1-1/4	
10152	1-1/2	
10153	1-3/4	1-1/8
10154	2"	
10155	3"	
10156	4"	
10157	5"	
10160	1"	
10161	1-1/4	
10162	1-1/2	
10163	1-3/4	1-1/4
10164	2"	
10165	3"	
10166	4"	
10167	5"	
10170	1"	
10171	1-1/4	
10172	1-1/2	
10173	1-3/4	
10174	2"	1-1/2
10175	3"	
10176	4"	
10177	5"	

Refer to page 102 for Finish Codes.
For MS39087 equivalents see page 271.

PART NUMBER ORDERING SYSTEM

XXXXX - X - XXXX - XX

PART NO. | MATERIAL | THREAD | FINISH

THREAD CODE & DEPTH		
THREAD	CODE	A
4-40	0440	1/4
6-32	0632	1/4-3/8

MATERIAL	CODE
Aluminum	A
Brass	B
Stainless Steel	SS
Steel	S

NOTE:
Metric size dimensions and threads available.
Please contact Sales Office.

5 Pasco Hill Road • Cromwell, CT 06416-1093
Phone: 860-828-0847 • Call Toll Free: 800-243-6032 • Fax: 860-828-0381
Web Address: http://www.amatom.com • E-Mail: sales@amatom.com

AMATOM®

1/4" ROUND HANDLES INTERNAL THREADS

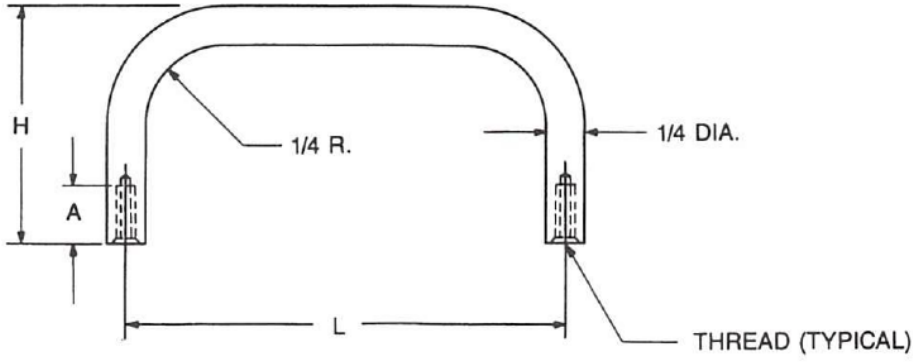

PART NO.	L ± 1/64	H ± 1/32
10200	1-1/8	
10201	1-1/4	
10202	1-1/2	
10203	1-3/4	
10204	2"	
10205	2-1/4	1"
10206	2-1/2	
10207	2-3/4	
10208	3"	
10209	4"	
10210	5"	
10215	1-1/2	
10216	1-3/4	
10217	2"	
10218	2-1/4	
10219	2-1/2	1-1/4
10220	2-3/4	
10221	3"	
10222	4"	
10223	5"	
10225	1-1/2	
10226	1-3/4	
10227	2"	
10228	2-1/4	
10229	2-1/2	
10230	2-3/4	1-1/2
10231	3"	
10232	3-1/2	
10233	4"	
10234	4-1/4	
10235	4-1/2	
10236	5"	
10237	6"	

PART NO.	L ± 1/64	H ± 1/32
10240	3"	
10241	4"	
10242	5"	2"
10243	6"	
10245	3"	
10246	4"	
10247	5"	2-1/2
10248	6"	
10250	3"	
10251	4"	
10252	5"	2-3/4
10253	6"	
10255	3"	
10256	4"	
10257	5"	3"
10258	6"	
10260	3"	
10261	4"	
10262	5"	3-1/2
10263	6"	
10265	4"	
10266	5"	4"
10267	6"	
10270	4"	
10271	5"	
10272	6"	4-1/4
10273	7"	
10274	8"	

Refer to page 102 for Finish Codes.
For MS39087 equivalents see page 271.

PART NUMBER ORDERING SYSTEM

XXXXX - X - XXXX - XX

PART NO. | MATERIAL | THREAD | FINISH

THREAD CODE & DEPTH		
THREAD	CODE	A
6-32	0632	3/8
8-32	0832	3/8-9/16

MATERIAL	CODE
Aluminum	A
Brass	B
Stainless Steel	SS
Steel	S

NOTE:
Metric size dimensions and threads available.
Please contact Sales Office.

5 Pasco Hill Road • Cromwell, CT 06416-1093
Phone: 860-828-0847 • Call Toll Free: 800-243-6032 • Fax: 860-828-0381
Web Address: http://www.amatom.com • E-Mail: sales@amatom.com

AMATOM®

5/16" ROUND HANDLES INTERNAL THREADS

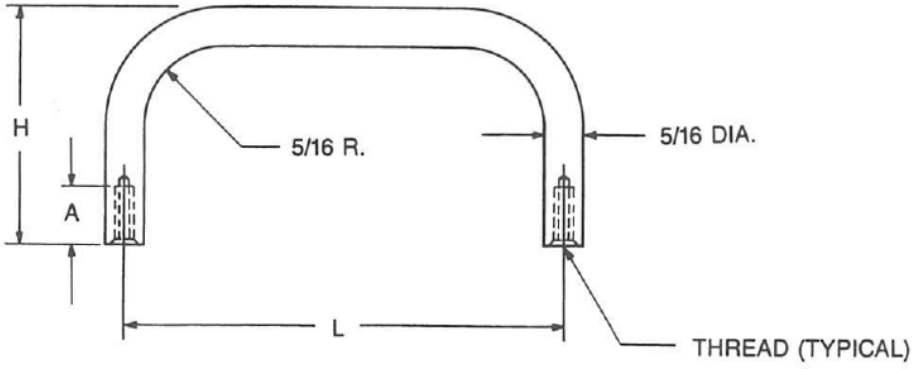

PART NO.	L ± 1/64	H ± 1/32
10300	2"	1"
10301	2-1/2	
10302	3"	
10303	3-1/2	
10304	4"	
10305	4-1/4	
10306	4-1/2	
10307	5"	
10308	6"	
10310	2"	1-1/8
10311	3"	
10312	4"	
10313	4-1/4	
10314	4-9/16	
10315	2"	1-1/4
10316	2-1/2	
10317	3"	
10318	3-1/2	
10319	4"	
10320	2"	1-5/16
10321	2-1/4	
10322	2-1/2	
10323	2-3/4	
10324	2-13/16	
10325	3"	
10326	4"	
10327	4-1/4	
10330	2"	1-3/8
10331	2-1/2	
10332	3"	
10333	4"	
10334	4-1/4	
10335	5"	
10340	2"	1-1/2
10341	2-1/8	
10342	2-1/4	
10343	2-3/8	
10344	2-1/2	
10345	2-3/4	
10346	3"	

PART NO.	L ± 1/64	H ± 1/32
10347	3-1/8	1-1/2
10348	3-1/4	
10349	3-1/2	
10350	4"	
10351	4-1/4	
10352	4-1/2	
10353	4-9/16	
10354	4-5/8	
10355	5"	
10356	5-1/4	
10357	5-1/2	
10358	5-3/4	
10359	6"	
10360	6-7/16	
10361	6-1/2	
10362	7"	
10363	7-1/2	
10364	7-3/4	
10365	8"	
10366	8-1/2	
10367	9"	
10368	9-1/2	
10369	10"	
10375	3"	1-3/4
10376	3-1/2	
10377	4"	
10378	4-1/4	
10379	4-1/2	
10380	4-9/16	
10381	4-5/8	
10382	4-3/4	
10383	5"	
10384	5-1/8	
10385	5-1/4	
10386	5-1/2	
10387	5-3/4	
10388	6"	
10389	6-1/4	
10390	6-7/16	
10391	6-1/2	
10392	6-3/4	

PART NO.	L ± 1/64	H ± 1/32
10393	7"	1-3/4
10394	7-1/4"	
10395	7-1/2"	
10396	7-3/4"	
10397	8"	
10398	9"	
10399	10"	

Continued on next page

Refer to page 102 for Finish Codes.
For MS39087 equivalents see page 271.

PART NUMBER ORDERING SYSTEM

XXXXX - X - XXXX - XX

PART NO. | MATERIAL | THREAD | FINISH

THREAD CODE & DEPTH		
THREAD	CODE	A
8-32	0832	5/16-7/16
10-32	1032	5/16-5/8

MATERIAL	CODE
Aluminum	A
Brass	B
Stainless Steel	SS
Steel	S

NOTE:
Metric size dimensions and threads available. Please contact Sales Office.

5 Pasco Hill Road • Cromwell, CT 06416-1093
Phone: 860-828-0847 • Call Toll Free: 800-243-6032 • Fax: 860-828-0381
Web Address: http://www.amatom.com • E-Mail: sales@amatom.com

AMATOM®

5/16" ROUND HANDLES INTERNAL THREADS

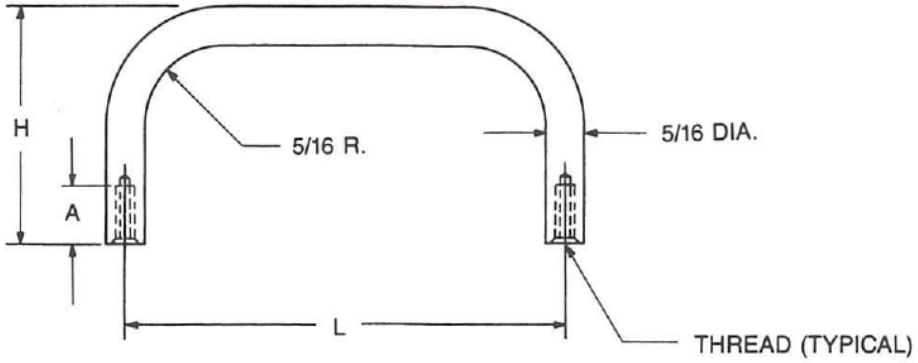

Continued from previous page

PART NO.	L ± 1/64	H ± 1/32
10401	3"	1-7/8
10402	3-1/4	
10403	4"	
10404	4-1/4	
10405	4-1/2	
10406	5"	
10407	6"	
10410	3"	2"
10411	4"	
10412	5"	
10413	5-1/2	
10414	6"	
10415	4"	2-1/4
10416	4-1/4	
10417	6"	
10418	7	
10419	8"	
10420	9"	
10421	9-1/4	
10422	10"	
10425	4"	3"
10426	5"	
10427	5-7/16	
10428	6"	
10429	6-1/2	
10430	7"	
10431	7-1/2	
10432	8"	
10433	9"	
10434	10"	
10435	12"	
10438	3"	3-1/2
10439	4"	
10440	5"	
10441	6"	
10442	7"	
10443	8"	
10444	9"	

PART NO.	L ± 1/64	H ± 1/32
10448	3"	4"
10449	4"	
10450	5"	
10451	6"	
10452	7"	
10453	8"	
10454	9"	
10458	4"	5"
10459	5"	
10460	6"	
10461	7"	
10462	8"	
10463	9"	
10464	10"	
10465	11"	
10466	12"	
10470	4"	6"
10471	5"	
10472	6"	
10473	7"	
10474	8"	
10475	9"	
10476	10"	
10477	11"	
10478	12"	
10480	4"	7"
10481	5"	
10482	6"	
10483	7"	
10484	8"	
10485	9"	
10486	10"	
10487	11"	
10488	12"	

Refer to page 102 for Finish Codes.
For MS39087 equivalents see page 271.

PART NUMBER ORDERING SYSTEM

XXXXX - X - XXXX - XX

PART NO. | MATERIAL | THREAD | FINISH

THREAD CODE & DEPTH		
THREAD	CODE	A
8-32	0832	5/16-7/16
10-32	1032	5/16-5/8

MATERIAL	CODE
Aluminum	A
Brass	B
Stainless Steel	SS
Steel	S

NOTE:
Metric size dimensions and threads available. Please contact Sales Office.

5 Pasco Hill Road • Cromwell, CT 06416-1093
Phone: 860-828-0847 • Call Toll Free: 800-243-6032 • Fax: 860-828-0381
Web Address: http://www.amatom.com • E-Mail: sales@amatom.com

AMATOM®

3/8" ROUND HANDLES INTERNAL THREADS

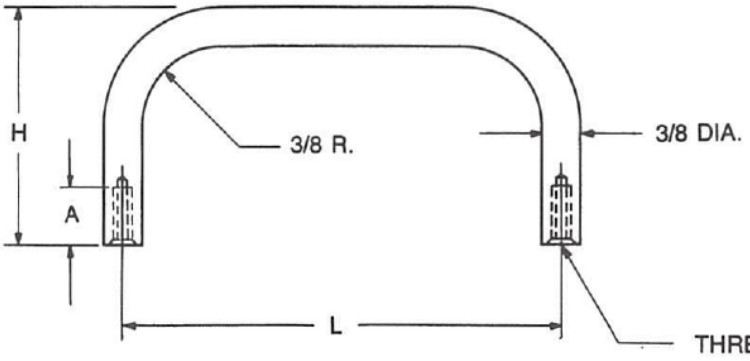

PART NO.	L ± 1/64	H ± 1/32
10495	2"	
10496	3"	
10497	4"	
10498	5"	1-5/16
10499	6"	
10500	7"	
10501	8"	
10505	2-1/2	
10506	3"	
10507	4"	
10508	4-1/4	
10509	4-1/2	
10510	5"	1-1/2
10511	6"	
10512	7"	
10513	8"	
10514	9"	
10515	10"	
10516	11"	
10517	12"	

PART NO.	L ± 1/64	H ± 1/32
10520	2"	
10521	2-1/2	
10522	3"	
10523	3-1/2	
10524	4"	
10525	4-1/4	
10526	4-1/2	
10527	5"	
10528	5-1/4	1-3/4
10529	5-1/2	
10530	5-3/4	
10531	6"	
10532	6-7/16	
10533	6-1/2	
10534	7"	
10535	8"	
10536	9"	
10537	10"	
10538	12"	

Continued on next page

Refer to page 102 for Finish Codes.
For MS39087 equivalents see page 271

PART NUMBER ORDERING SYSTEM

XXXXX - X - XXXX - XX

PART NO. | MATERIAL | THREAD | FINISH

THREAD CODE & DEPTH		
THREAD	CODE	A
8-32	0832	7/16-1/2
10-32	1032	7/16-5/8
1/4-20	2520	3/8-5/8

MATERIAL	CODE
Aluminum	A
Brass	B
Stainless Steel	SS
Steel	S

NOTE:
Metric size dimensions and threads available.
Please contact Sales Office.

5 Pasco Hill Road • Cromwell, CT 06416-1093
Phone: 860-828-0847 • Call Toll Free: 800-243-6032 • Fax: 860-828-0381
Web Address: http://www.amatom.com • E-Mail: sales@amatom.com

AMATOM®

3/8" ROUND HANDLES INTERNAL THREADS

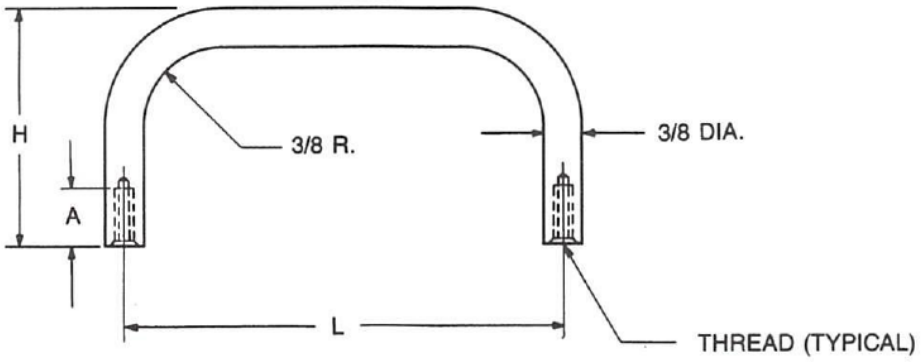

Continued from previous page

PART NO.	L ± 1/64	H ± 1/32
10540	3"	
10541	4"	
10542	4-1/4	
10543	4-1/2	
10544	5"	
10545	6"	
10546	6-1/2	1-7/8
10547	7"	
10548	8"	
10549	9"	
10550	10"	
10551	12"	
10555	3"	
10556	4"	
10557	4-1/4	
10558	5"	
10559	6"	2"
10560	7"	
10561	7-1/2	
10562	8"	
10563	9"	
10564	10"	
10567	3"	
10568	3-1/2	
10569	4"	2-3/8
10570	4-1/2	
10571	5"	
10572	6"	

PART NO.	L ± 1/64	H ± 1/32
10575	3"	
10576	4"	
10577	4-1/4	
10578	5"	
10579	6"	3"
10580	7"	
10581	7-1/2	
10582	8"	
10583	9"	
10584	10"	
10588	3"	
10589	4"	
10590	4-1/4	
10591	5"	
10592	6"	4"
10593	7"	
10594	7-1/2	
10595	8"	
10596	9"	
10597	10"	

Refer to page 102 for Finish Codes.
For MS39087 equivalents see page 271.

PART NUMBER ORDERING SYSTEM

XXXXX - X - XXXX - XX

PART NO. | MATERIAL | THREAD | FINISH

THREAD CODE & DEPTH		
THREAD	CODE	A
8-32	0832	7/16-1/2
10-32	1032	7/16-5/8
1/4-20	2520	3/8-5/8

MATERIAL	CODE
Aluminum	A
Brass	B
Stainless Steel	SS
Steel	S

NOTE:
Metric size dimensions and threads available.
Please contact Sales Office.

5 Pasco Hill Road • Cromwell, CT 06416-1093
Phone: 860-828-0847 • Call Toll Free: 800-243-6032 • Fax: 860-828-0381
Web Address: http://www.amatom.com • E-Mail: sales@amatom.com

1/2" ROUND HANDLES INTERNAL THREADS

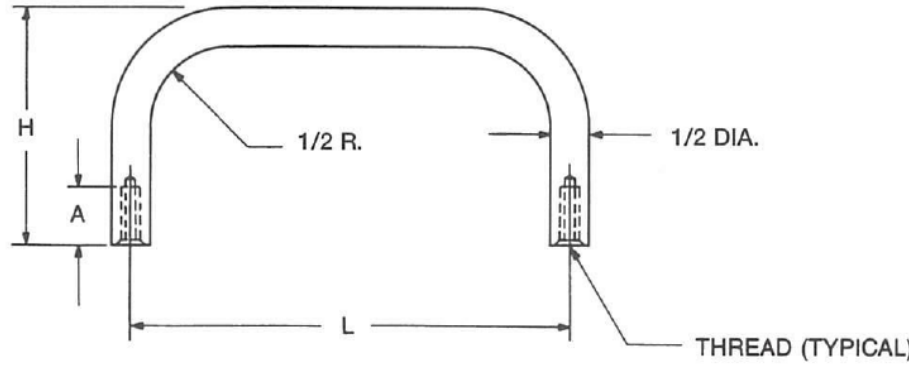

Refer to page 102 for Finish Codes.

PART NO.	L ± 1/64	H ± 1/32
10615	4"	2"
10616	6"	
10617	8	
10618	10"	

PART NUMBER ORDERING SYSTEM

XXXXX - X - XXXX - XX

PART NO. | THREAD | MATERIAL | FINISH

THREAD CODE & DEPTH		
THREAD	CODE	A
10-32	1032	7/16-5/8
1/4-20	2520	3/8-5/8
5/16-18	3118	3/8-5/8

MATERIAL	CODE
Aluminum	A
Brass	B
Stainless Steel	SS
Steel	S

NOTE:
Metric size dimensions and threads available.
Please contact Sales Office.

5 Pasco Hill Road • Cromwell, CT 06416-1093
Phone: 860-828-0847 • Call Toll Free: 800-243-6032 • Fax: 860-828-0381
Web Address: http://www.amatom.com • E-Mail: sales@amatom.com

AMATOM®

5/16" ROUND HANDLES EXTERNAL THREADS - NO SHOULDER

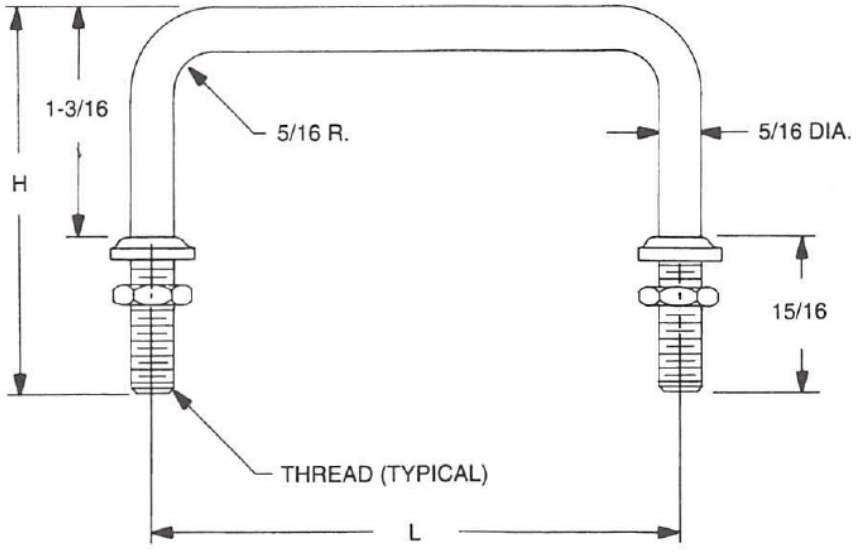



PART NO.
16012 Series
See Page 102.

Refer to page 102 for Finish Codes.
Supplied with ferrule and nut. (Bulk Package)

PART NO.	L ± 1/64	H ± 1/32
10645	3"	
10646	3-3/4	
10647	4"	
10648	4-1/4	
10649	4-1/2	2-1/8
10650	4-9/16	
10651	5"	
10652	6"	
10653	9"	

PART NUMBER ORDERING SYSTEM

XXXXX - X - XXXX - XX

PART NO. | MATERIAL | THREAD | FINISH

THREAD CODE	
THREAD	CODE
5/16-18	3118

MATERIAL	CODE
Aluminum	A
Brass	B
Stainless Steel	SS
Steel	S

NOTE:
Metric size dimensions and threads available.
Please contact Sales Office.

5 Pasco Hill Road • Cromwell, CT 06416-1093
Phone: 860-828-0847 • Call Toll Free: 800-243-6032 • Fax: 860-828-0381
Web Address: http://www.amatom.com • E-Mail: sales@amatom.com

3/8" ROUND HANDLES EXTERNAL THREADS - NO SHOULDER

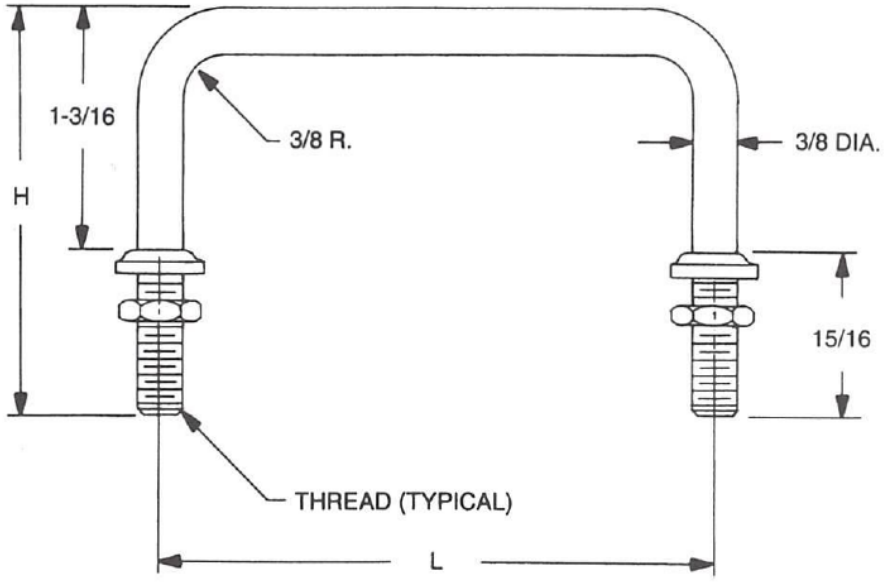



PART NO.
16012 Series
See Page 169.

Refer to page 102 for Finish Codes.
Supplied with ferrule and nut. (Bulk Package)

PART NO.	L ± 1/64	H ± 1/32
10660	3"	
10661	3-3/4	
10662	4"	
10663	4-1/4	
10664	4-1/2	2-1/8
10665	4-9/16	
10666	5"	
10667	6"	
10668	6"	

PART NUMBER ORDERING SYSTEM

XXXXX - X - XXXX - XX

PART NO. | MATERIAL | THREAD | FINISH

THREAD CODE	
THREAD	CODE
3/8-24	3724

MATERIAL	CODE
Aluminum	A
Brass	B
Stainless Steel	SS
Steel	S

NOTE:
Metric size dimensions and threads available.
Please contact Sales Office.

5 Pasco Hill Road • Cromwell, CT 06416-1093
Phone: 860-828-0847 • Call Toll Free: 800-243-6032 • Fax: 860-828-0381
Web Address: http://www.amatom.com • E-Mail: sales@amatom.com

AMATOM®

3/16" ROUND HANDLES EXTERNAL THREADS - WITH SHOULDER

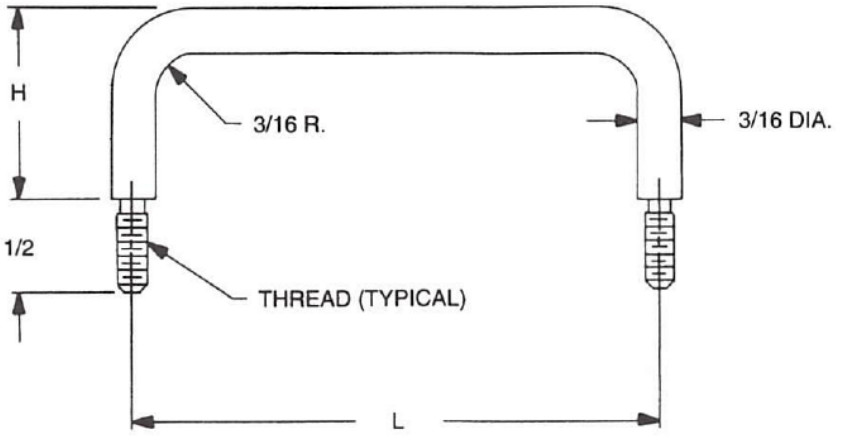

Refer to page 102 for Finish Codes.
Nuts and washers not supplied.

PART NO.	L ± 1/64	H ± 1/32
10675	2"	1"
10676	2-1/2	
10677	3"	
10678	3-1/2	
10679	4"	
10680	5"	
10681	6'	
10685	2"	1-1/2
10686	2-1/2	
10687	3"	
10688	3-1/2	
10689	4"	
10690	5"	
10691	6"	
10695	2"	2"
10696	2-1/2	
10697	3"	
10698	3-1/2	
10699	4"	
10701	5"	
10702	6"	

PART NUMBER ORDERING SYSTEM

XXXXX - X - XXXX - XX

PART NO. | MATERIAL | THREAD | FINISH

THREAD CODE	
THREAD	CODE
4-40	0440
6-32	0632

MATERIAL	CODE
Aluminum	A
Brass	B
Stainless Steel	SS
Steel	S

NOTE:
Metric size dimensions and threads available.
Please contact Sales Office.

5 Pasco Hill Road • Cromwell, CT 06416-1093
Phone: 860-828-0847 • Call Toll Free: 800-243-6032 • Fax: 860-828-0381
Web Address: http://www.amatom.com • E-Mail: sales@amatom.com

1/4" ROUND HANDLES EXTERNAL THREADS - WITH SHOULDER

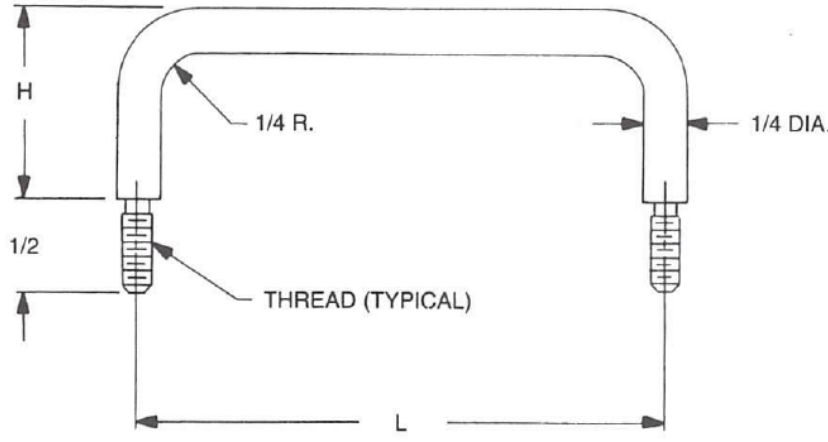

Refer to page 102 for Finish Codes.
Nuts and washers not supplied.

PART NO.	L ± 1/64	H ± 1/32
10720	2"	1"
10721	2-1/2	
10722	3"	
10723	3-1/2	
10724	4"	
10725	5"	
10726	6"	
10730	2"	1-1/2
10731	2-1/2	
10732	3"	
10733	3-1/2	
10734	4"	
10735	5"	
10736	6"	
10740	2"	2"
10741	2-1/2	
10742	3"	
10743	3-1/2	
10744	4"	
10745	5"	
10746	6"	

PART NUMBER ORDERING SYSTEM

XXXXX - X - XXXX - XX

PART NO. | MATERIAL | THREAD | FINISH

THREAD CODE	
THREAD	CODE
8-32	0832
10-32	1032

MATERIAL	CODE
Aluminum	A
Brass	B
Stainless Steel	SS
Steel	S

NOTE:
Metric size dimensions and threads available.
Please contact Sales Office.

5 Pasco Hill Road • Cromwell, CT 06416-1093
Phone: 860-828-0847 • Call Toll Free: 800-243-6032 • Fax: 860-828-0381
Web Address: http://www.amatom.com • E-Mail: sales@amatom.com

AMATOM®

5/16" ROUND HANDLES EXTERNAL THREADS - WITH SHOULDER

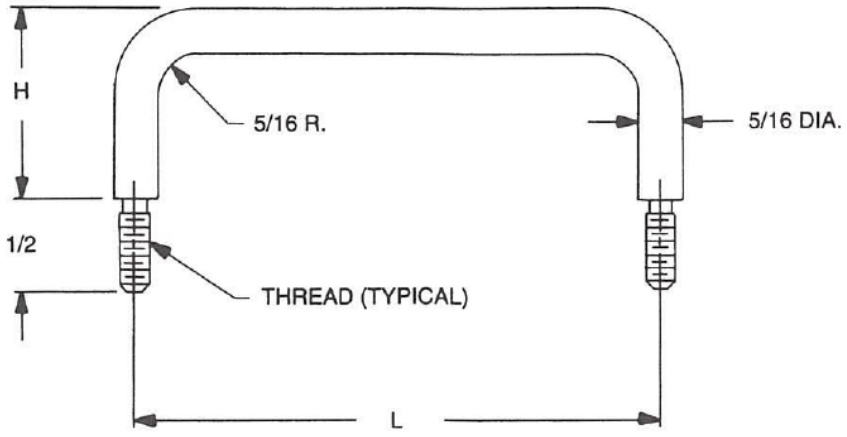

Refer to page 102 for Finish Codes.
Nuts and washers not supplied.

PART NO.	L ± 1/64	H ± 1/32
10775	2"	
10776	3"	
10777	4"	
10778	4-1/4	
10779	4-1/2	
10780	5"	1-13/16
10781	6"	
10782	7"	
10783	8"	
10784	9"	
10788	2"	
10789	3"	2"
10790	4"	
10793	2"	
10794	3"	
10795	4"	2-1/4
10796	4-1/2	
10797	5"	
10798	6"	

PART NUMBER ORDERING SYSTEM

XXXXX - X - XXXX - XX

PART NO. | MATERIAL | THREAD | FINISH

THREAD CODE	
THREAD	CODE
10-32	1032
1/4-20	2520

MATERIAL	CODE
Aluminum	A
Brass	B
Stainless Steel	SS
Steel	S

NOTE:
Metric size dimensions and threads available.
Please contact Sales Office.

5 Pasco Hill Road • Cromwell, CT 06416-1093
Phone: 860-828-0847 • Call Toll Free: 800-243-6032 • Fax: 860-828-0381
Web Address: http://www.amatom.com • E-Mail: sales@amatom.com

7/16" x 9/32" OVAL HANDLES INTERNAL THREADS

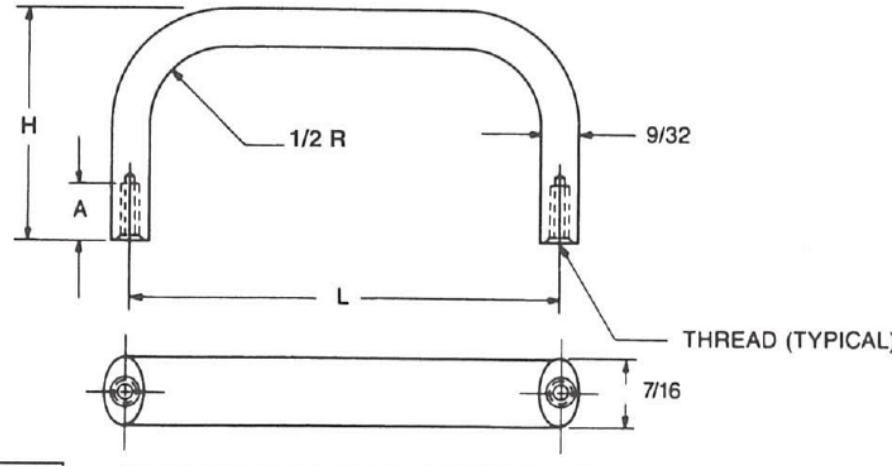

PART NO.	L ± 1/64	H ± 1/32
10820	2"	
10821	2-1/2	
10822	3"	
10823	4"	
10824	4-1/4	1"
10825	4-1/2	
10826	4-9/16	
10827	5"	
10828	6"	
10829	6-7/16	
10835	2"	
10836	2-1/4	
10837	2-1/2	
10838	3"	
10839	3-1/2	1-9/32
10840	4"	
10841	4-1/4	
10842	4-1/2	
10843	4-9/16	
10844	6"	
10850	2"	
10851	2-1/4	
10852	2-1/2	
10853	3"	
10854	3-1/2	
10855	4"	1-1/2
10856	4-1/4	
10857	4-1/2	
10858	4-9/16	
10859	5"	
10860	6"	

PART NO.	L ± 1/64	H ± 1/32
10865	4"	
10866	4-9/16	
10867	6"	
10868	6-7/16	1-3/4
10869	7"	
10870	8"	
10871	9"	
10872	12"	
10876	4"	
10877	4-9/16	
10878	6"	
10879	6-7/16	2"
10880	7"	
10881	8"	
10882	9"	
10883	12"	

Refer to page 102 for Finish Codes.
For MS39087 equivalents see page 271.

PART NUMBER ORDERING SYSTEM

XXXXX - X - XXXX - XX

PART NO. | MATERIAL | THREAD | FINISH

THREAD CODE & DEPTH		
THREAD	CODE	A
8-32	0832	5/16-1/2
10-24	1024	5/16-5/8
10-32	1032	5/16-5/8

MATERIAL	CODE
Aluminum	A
Brass	B
Stainless Steel	SS

NOTE:
Metric size dimensions and threads available.
Please contact Sales Office.

5 Pasco Hill Road • Cromwell, CT 06416-1093
Phone: 860-828-0847 • Call Toll Free: 800-243-6032 • Fax: 860-828-0381
Web Address: http://www.amatom.com • E-Mail: sales@amatom.com

AMATOM®

5/8" x 9/32" OVAL HANDLES INTERNAL THREADS

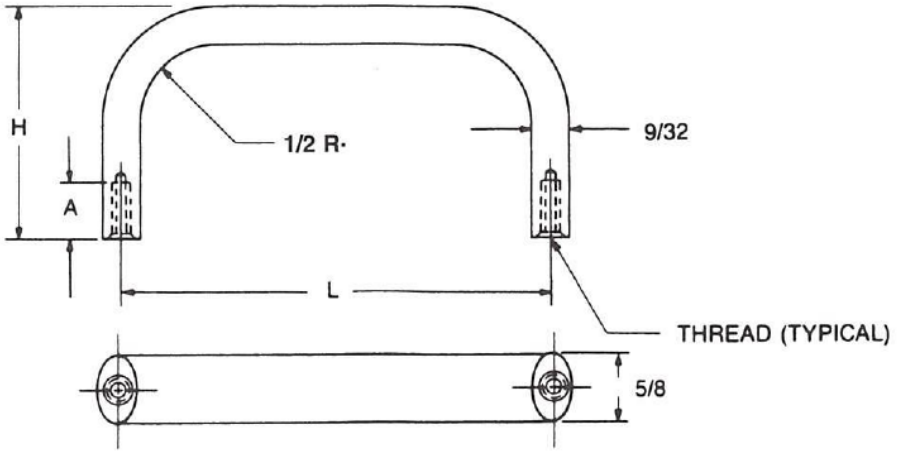

PART NO.	L ± 1/64	H ± 1/32
10910	2-1/2	
10911	3"	
10912	4"	
10913	4-1/4	
10914	4-1/2	1"
10915	4-9/16	
10916	5"	
10917	6"	
10918	6-7/16	
10922	2-1/2	
10923	3"	
10924	4"	
10925	4-1/4	
10926	4-1/2	1-9/32
10927	4-9/16	
10928	5"	
10929	6"	
10930	6-7/16	
10935	2-1/2	
10936	3"	
10937	4"	
10938	4-1/4	
10939	4-1/2	
10940	4-9/16	
10941	5"	1-1/2
10942	6"	
10943	6-7/16	
10944	7"	
10945	8"	
10946	9"	
10947	9-1/2	

PART NO.	L ± 1/64	H ± 1/32
10955	3"	
10956	4"	
10957	4-1/4	
10958	4-1/2	
10959	4-9/16	
10960	5"	
10961	5-1/2	
10962	6"	1-3/4
10963	6-7/16	
10964	7"	
10965	8"	
10966	8-1/4	
10967	9"	
10968	9-1/2	
10969	10"	
10970	12"	
10975	4-1/2	
10976	4-9/16	
10977	5"	
10978	5-1/2	
10979	6"	
10980	7"	2"
10981	8"	
10982	8-1/4	
10983	8-1/2	
10984	9"	
10985	10"	
10986	12"	
10990	3"	
10991	4"	
10992	5"	
10993	6"	2-1/4
10994	7"	
10995	8"	
10996	9"	

Continued on next page

Refer to page 102 for Finish Codes.
For MS39087 equivalents see page 271.

PART NUMBER ORDERING SYSTEM

XXXXX - X - XXXX - XX

PART NO. | MATERIAL | THREAD | FINISH

THREAD CODE & DEPTH		
THREAD	CODE	A
8-32	0832	5/16-5/8
10-24	1024	5/16-5/8
10-32	1032	5/16-5/8

MATERIAL	CODE
Aluminum	A
Brass	B
Stainless Steel	SS

NOTE:
Metric size dimensions and threads available.
Please contact Sales Office.

5 Pasco Hill Road • Cromwell, CT 06416-1093
Phone: 860-828-0847 • Call Toll Free: 800-243-6032 • Fax: 860-828-0381
Web Address: http://www.amatom.com • E-Mail: sales@amatom.com

5/8" x 9/32" OVAL HANDLES INTERNAL THREADS

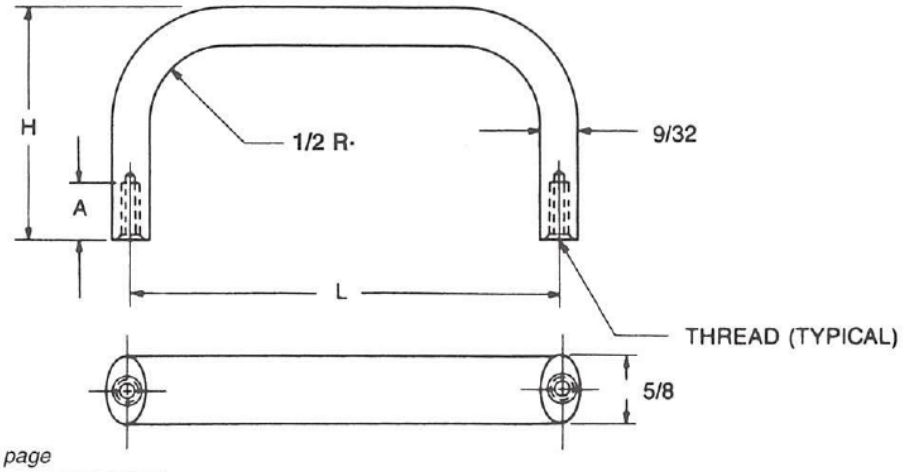

Continued from previous page

PART NO.	L ± 1/64	H ± 1/32
11000	4"	
11001	4-1/2	
11002	4-9/16	
11003	5"	
11004	6"	2-1/2
11005	7"	
11006	8"	
11007	9"	
11008	10"	
11009	12"	
11015	4-1/2	
11016	4-9/16	
11017	5"	
11018	6"	
11019	7"	3
11020	8"	
11021	9"	
11022	10"	
11023	12"	
11028	4-1/2	
11029	4-9/16	
11030	5"	
11031	6"	
11032	7"	4
11033	8"	
11034	9"	
11035	10"	
11036	12"	

Refer to page 102 for Finish Codes.
For MS39087 equivalents see page 271.

PART NUMBER ORDERING SYSTEM

XXXXX - X - XXXX - XX

PART NO. | MATERIAL | THREAD | FINISH

THREAD CODE & DEPTH		
THREAD	CODE	A
8-32	0832	5/16-5/8
10-24	1024	5/16-5/8
10-32	1032	5/16-5/8

MATERIAL	CODE
Aluminum	A
Brass	B
Stainless Steel	SS

NOTE:
Metric size dimensions and threads available.
Please contact Sales Office.

5 Pasco Hill Road • Cromwell, CT 06416-1093
Phone: 860-828-0847 • Call Toll Free: 800-243-6032 • Fax: 860-828-0381
Web Address: http://www.amatom.com • E-Mail: sales@amatom.com

AMATOM®

5/8" x 3/8" OVAL HANDLES INTERNAL THREADS

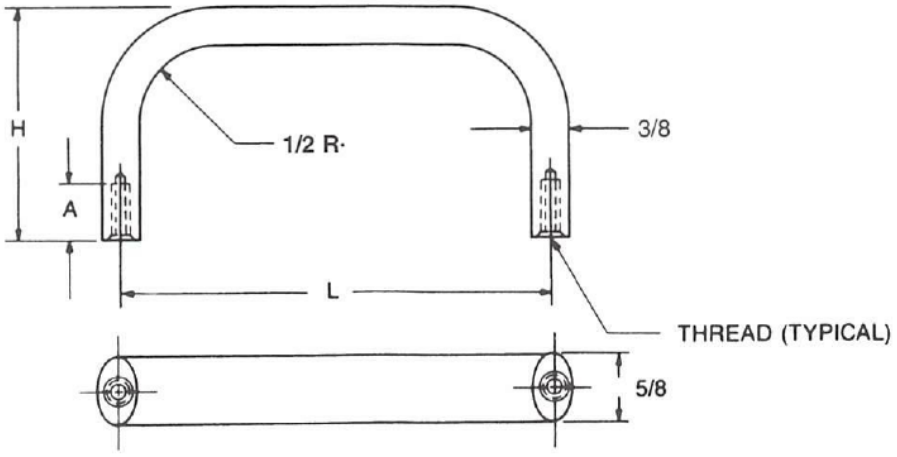

PART NO.	L ± 1/64	H ± 1/32
11060	2-1/2	
11061	3"	
11062	4"	
11063	4-1/4	
11064	4-1/2	
11065	4-9/16	1-9/32
11066	5"	
11067	6"	
11068	7"	
11069	8"	
11070	9"	
11075	2-1/2	
11076	3"	
11077	4"	
11078	4-1/4	
11079	4-1/2	
11080	4-9/16	1-1/2
11081	5"	
11082	6"	
11083	7"	
11084	8"	
11085	9"	
11090	3"	
11091	4"	
11092	4-1/4	
11093	4-1/2	
11094	4-9/16	
11095	5"	
11096	5-1/2	
11097	6"	1-3/4
11098	6-7/16	
11099	7"	
11100	8"	
11101	9"	
11102	10"	
11103	12"	
11108	4-1/2	
11109	4-9/16	2"
11110	5"	
11111	6"	

PART NO.	L ± 1/64	H ± 1/32
11112	7"	
11113	8"	
11114	9"	2"
11115	10"	
11116	12"	
11120	2-1/2	
11121	3"	
11122	4"	
11123	4-1/2	
11124	5"	
11125	5-1/2	
11126	6"	
11127	6-1/2	2-1/8
11128	7"	
11129	7-1/2	
11130	8"	
11131	8-1/2	
11132	9"	
11133	9-1/2	
11134	10"	
11135	4-1/2	
11136	4-9/16	
11137	5"	
11138	6"	
11139	7"	2-1/2
11140	8"	
11141	9"	
11142	10"	
11143	12"	
11145	4-1/2	
11146	4-9/16	
11147	5"	
11148	6"	
11149	7"	3"
11150	8"	
11151	9"	
11152	10"	
11153	12"	

Refer to page 102 for Finish Codes.
For MS39087 equivalents see page 271.

PART NUMBER ORDERING SYSTEM

XXXXX - X - XXXX - XX

PART NO. | MATERIAL | THREAD | FINISH

THREAD CODE & DEPTH		
THREAD	CODE	A
8-32	0832	5/16-5/8
10-24	1024	5/16-5/8
10-32	1032	5/16-5/8

MATERIAL	CODE
Aluminum	A
Brass	B

NOTE:
Metric size dimensions and threads available.
Please contact Sales Office.

5 Pasco Hill Road • Cromwell, CT 06416-1093
Phone: 860-828-0847 • Call Toll Free: 800-243-6032 • Fax: 860-828-0381
Web Address: http://www.amatom.com • E-Mail: sales@amatom.com

5/8" x 5/16" HALF ROUND HANDLES INTERNAL THREADS

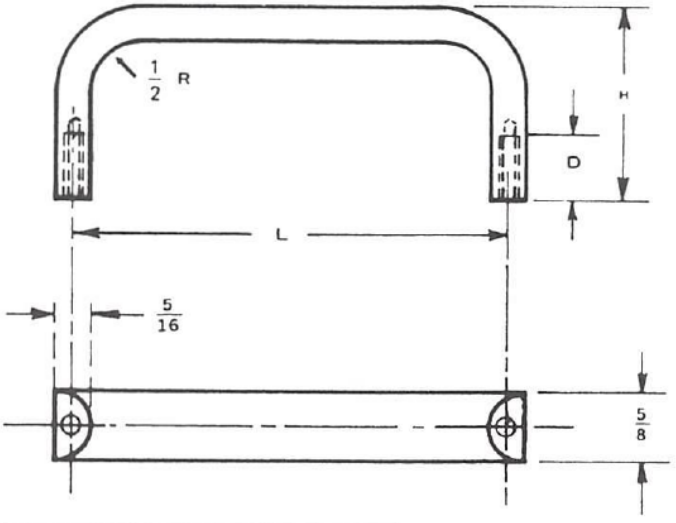

- Custom or Special Handles to meet specific requirements can be supplied.
- Tolerances See Page 101.
- Refer to Page 102 for Finish Codes.
- Depth of Thread (D) See Chart B Page 101.

PART NO.	L ± 1/64	H ± 1/32
11230	3"	1-9/32
11231	4"	
11232	4-9/16	
11233	5"	
11234	6"	
11235	6-7/16	
11236	7"	
11237	8"	
11238	9"	
11240	3"	1-1/2
11241	4"	
11242	4-9/16	
11243	5"	
11244	6"	
11245	6-7/16	
11246	7"	
11247	8"	
11248	9"	
11250	3"	1-3/4
11251	4"	
11252	4-9/16	
11253	5"	
11254	6"	
11255	6-7/16	
11256	7"	
11257	8"	
11258	9"	
11260	3"	2"
11261	4"	
11262	4-9/16	
11263	5"	
11264	6"	
11265	6-7/16	
11266	7"	
11267	8"	
11268	9"	

PART NUMBER ORDERING SYSTEM

XXXXX - X - XXXX - XX

PART NO. | MATERIAL | THREAD | FINISH

THREAD CODE	
THREAD	CODE
10-24	1024
10-32	1032

MATERIAL	CODE
Aluminum	A
Brass	B

NOTE:
Metric size dimensions and threads available.
Please contact Sales Office.

5 Pasco Hill Road • Cromwell, CT 06416-1093
Phone: 860-828-0847 • Call Toll Free: 800-243-6032 • Fax: 860-828-0381
Web Address: http://www.amatom.com • E-Mail: sales@amatom.com

AMATOM®

1/2" x 3/16" RECTANGULAR HANDLES INTERNAL THREADS

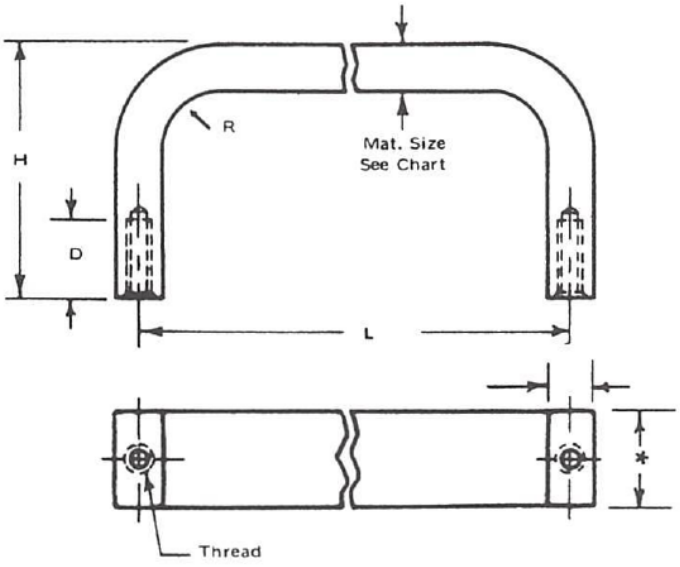

- Custom or Special Handles to meet specific requirements can be supplied.
- Tolerances See Page 101.
- Refer to Page 102 for Finish Codes.
- Depth of Thread (D) See Chart B Page 101.

PART NO.	L ± 1/64	H ± 1/32
11300	2"	1-1/2
11301	3"	
11302	4"	
11303	5"	
11304	6"	
11305	7"	
11306	8"	
11307	9"	
11308	10"	
11310	2"	1-3/4
11311	3"	
11312	4"	
11313	5"	
11314	6"	
11315	7"	
11316	8"	
11317	9"	
11318	10"	
11320	2"	2"
11321	3"	
11322	4"	
11323	5"	
11324	6"	
11325	7"	
11326	8"	
11327	9"	
11328	10"	

PART NUMBER ORDERING SYSTEM

XXXXX - X - XXXX - XX

PART NO. | MATERIAL | THREAD | FINISH

THREAD CODE	
THREAD	CODE
4-40	0440
6-32	0632

MATERIAL	CODE
Aluminum	A
Brass	B

NOTE:
Metric size dimensions and threads available.
Please contact Sales Office.

5 Pasco Hill Road • Cromwell, CT 06416-1093
Phone: 860-828-0847 • Call Toll Free: 800-243-6032 • Fax: 860-828-0381
Web Address: http://www.amatom.com • E-Mail: sales@amatom.com

1/2" x 1/4" RECTANGULAR HANDLES INTERNAL THREADS

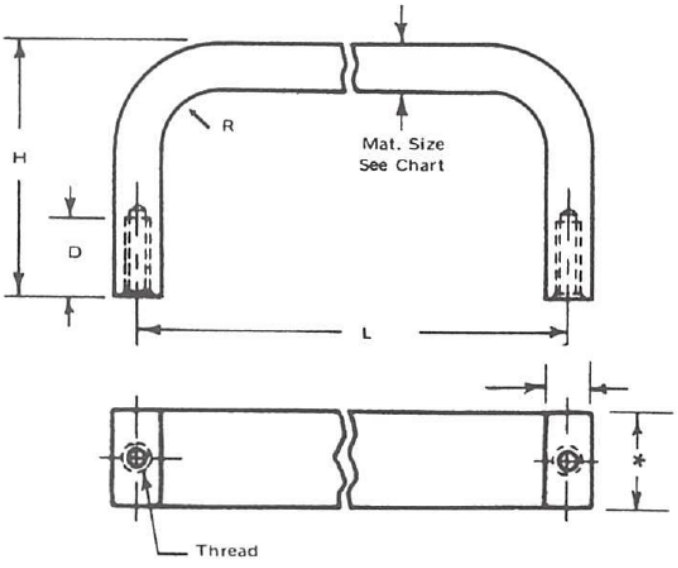

- Custom or Special Handles to meet specific requirements can be supplied.
- Tolerances See Page 101.
- Refer to Page 102 for Finish Codes.
- Depth of Thread (D) See Chart B Page 101.

PART NO.	L ± 1/64	H ± 1/32
11350	2"	1-1/2
11351	3"	
11352	4"	
11353	5"	
11354	6"	
11355	7"	
11356	8"	
11357	9"	
11358	10"	
11360	2"	1-3/4
11361	3"	
11362	4"	
11363	5"	
11364	6"	
11365	7"	
11366	8"	
11367	9"	
11368	10"	
11370	2"	2"
11371	3"	
11372	4"	
11373	5"	
11374	6"	
11375	7"	
11376	8"	
11377	9"	
11378	10"	

PART NUMBER ORDERING SYSTEM

XXXXX - X - XXXX - XX

PART NO. | MATERIAL | THREAD | FINISH

THREAD CODE	
THREAD	CODE
6-32	0632
8-32	0832

MATERIAL	CODE
Aluminum	A
Brass	B

NOTE:
Metric size dimensions and threads available.
Please contact Sales Office.

5 Pasco Hill Road • Cromwell, CT 06416-1093
Phone: 860-828-0847 • Call Toll Free: 800-243-6032 • Fax: 860-828-0381
Web Address: http://www.amatom.com • E-Mail: sales@amatom.com

AMATOM®

1/2" x 5/16" RECTANGULAR HANDLES INTERNAL THREADS

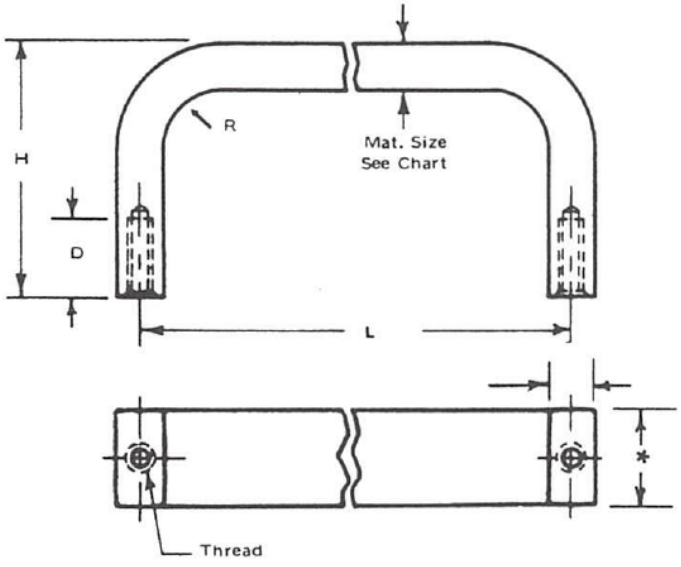

- Custom or Special Handles to meet specific requirements can be supplied.
- Tolerances See Page 101.
- Refer to Page 102 for Finish Codes.
- Depth of Thread (D) See Chart B Page 101.

PART NO.	L ± 1/64	H ± 1/32
11400	2"	
11401	3"	
11402	4"	
11403	5"	
11404	6"	1"
11405	7"	
11406	8"	
11407	9"	
11408	10"	
11410	2"	
11411	3"	
11412	4"	
11413	5"	
11414	6"	1-1/4
11415	7"	
11416	8"	
11417	9"	
11418	10"	
11420	2"	
11421	3"	
11422	4"	
11423	5"	
11424	6"	1-1/2
11425	7"	
11426	8"	
11427	9"	
11428	10"	

PART NO.	L ± 1/64	H ± 1/32
11430	2"	
11431	3"	
11432	4"	
11433	5"	
11434	6"	1-3/4
11435	7"	
11436	8"	
11437	9"	
11438	10"	
11440	2"	
11441	3"	
11442	4"	
11443	5"	
11444	6"	2"
11445	7"	
11446	8"	
11447	9"	
11448	10"	

PART NUMBER ORDERING SYSTEM

XXXXX - X - XXXX - XX

PART NO. | MATERIAL | THREAD | FINISH

THREAD CODE	
THREAD	CODE
8-32	0832
10-32	1032

MATERIAL	CODE
Aluminum	A
Brass	B

NOTE:
Metric size dimensions and threads available.
Please contact Sales Office.

5 Pasco Hill Road • Cromwell, CT 06416-1093
Phone: 860-828-0847 • Call Toll Free: 800-243-6032 • Fax: 860-828-0381
Web Address: http://www.amatom.com • E-Mail: sales@amatom.com

5/8" x 1/4" RECTANGULAR HANDLES INTERNAL THREADS

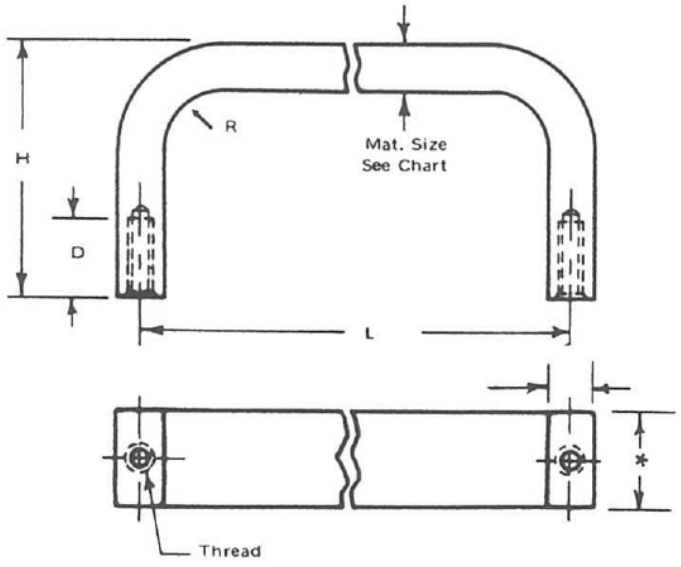

- Custom or Special Handles to meet specific requirements can be supplied.
- Tolerances See Page 101.
- Refer to Page 102 for Finish Codes.
- Depth of Thread (D) See Chart B Page 101.

PART NUMBER ORDERING SYSTEM

XXXXX - X - XXXX - XX

PART NO. | MATERIAL | THREAD | FINISH

PART NO.	L ± 1/64	H ± 1/32
11475	2"	
11476	2-1/2	
11477	3"	
11478	4"	
11479	4-1/4	
11480	4-1/2	
11481	4-9/16	1"
11482	5"	
11483	6"	
11484	7"	
11485	8"	
11486	9"	
11487	10"	
11490	2"	
11491	3"	
11492	4"	
11493	5"	
11494	6"	1-1/4
11495	7"	
11496	8"	
11497	9"	
11498	10"	
11500	2"	
11501	2-1/2	
11502	3"	
11503	4"	
11504	4-1/4	
11505	4-1/2	
11506	4-9/16	1-5/16
11507	5"	
11508	6"	
11509	7"	
11510	8"	
11511	9"	
11512	10"	

PART NO.	L ± 1/64	H ± 1/32
11515	3"	
11516	4"	
11517	4-1/4	
11518	4-1/2	
11519	4-9/16	
11520	6"	1-1/2
11521	6-7/16	
11522	7"	
11523	8"	
11524	9"	
11525	10"	
11530	4"	
11531	4-1/4	
11532	4-1/2	
11533	4-9/16	
11534	6"	
11535	6-7/16	1-3/4
11536	6-1/2	
11537	7"	
11538	8"	
11439	9"	
11540	10"	
11545	4-1/2	
11546	6"	
11547	7"	2"
11548	8"	
11549	9"	
11550	10"	
11555	4-1/2	
11556	6"	
11557	7"	2-1/2
11558	8"	
11559	9"	
11560	10"	

PART NO.	L ± 1/64	H ± 1/32
11565	4-1/2	
11566	6"	
11567	7"	3"
11568	8"	
11569	9"	
11570	10"	
11575	4-1/2	
11576	6"	
11577	7"	4"
11578	8"	
11579	9"	
11580	10"	

THREAD CODE	
THREAD	CODE
6-32	0632
8-32	0832

MATERIAL	CODE
Aluminum	A
Brass	B

NOTE:
Metric size dimensions and threads available.
Please contact Sales Office.

5 Pasco Hill Road • Cromwell, CT 06416-1093
Phone: 860-828-0847 • Call Toll Free: 800-243-6032 • Fax: 860-828-0381
Web Address: http://www.amatom.com • E-Mail: sales@amatom.com

AMATOM®

1" x 1/4" RECTANGULAR HANDLES INTERNAL THREADS

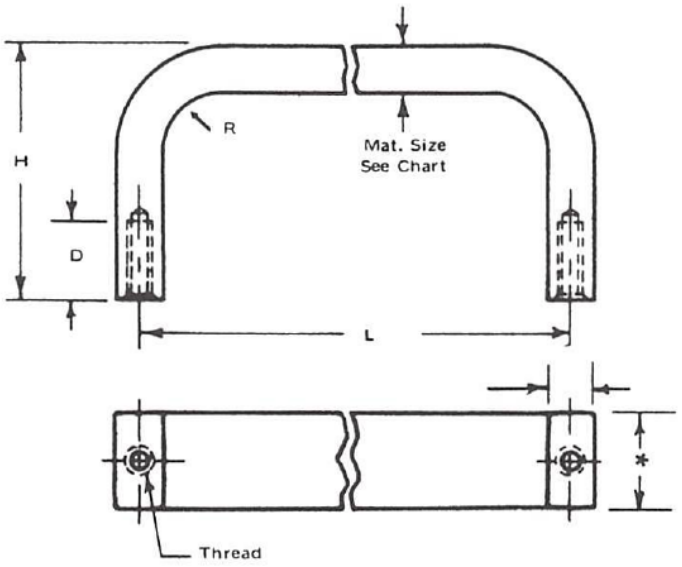

- Custom or Special Handles to meet specific requirements can be supplied.
- Tolerances See Page 101.
- Refer to Page 102 for Finish Codes.
- Depth of Thread (D) See Chart B Page 101.

PART NO.	L ± 1/64	H ± 1/32
11600	2"	1"
11601	3"	
11602	4"	
11603	5"	
11604	6"	
11605	7"	
11606	8"	
11607	9"	
11608	10"	
11610	4"	1-1/4
11611	5"	
11612	6"	
11613	7"	
11614	8"	
11615	9"	
11616	10"	
11620	2"	1-1/2
11621	3"	
11622	4"	
11623	5"	
11624	6"	
11625	7"	
11626	8"	
11627	9"	
11628	10"	

PART NO.	L ± 1/64	H ± 1/32
11630	2"	2"
11631	3"	
11632	4"	
11633	5"	
11634	6"	
11635	7"	
11636	8"	
11637	9"	
11638	10"	
11640	2"	3"
11641	3"	
11642	4"	
11643	5"	
11644	6"	
11645	7"	
11646	8"	
11647	9"	
11648	10"	
11650	2"	4"
11651	3"	
11652	4"	
11653	5"	
11654	6"	
11655	7"	
11656	8"	
11657	9"	
11658	10"	

PART NUMBER ORDERING SYSTEM

XXXXX - X - XXXX - XX

PART NO. | MATERIAL | THREAD | FINISH

THREAD CODE	
THREAD	CODE
6-32	0632
8-32	0832

MATERIAL	CODE
Aluminum	A
Brass	B

NOTE:
Metric size dimensions and threads available.
Please contact Sales Office.

5 Pasco Hill Road • Cromwell, CT 06416-1093
Phone: 860-828-0847 • Call Toll Free: 800-243-6032 • Fax: 860-828-0381
Web Address: http://www.amatom.com • E-Mail: sales@amatom.com

1/4" ROUND HANDLES EXTERNAL THREADS - 90° FREE FALL

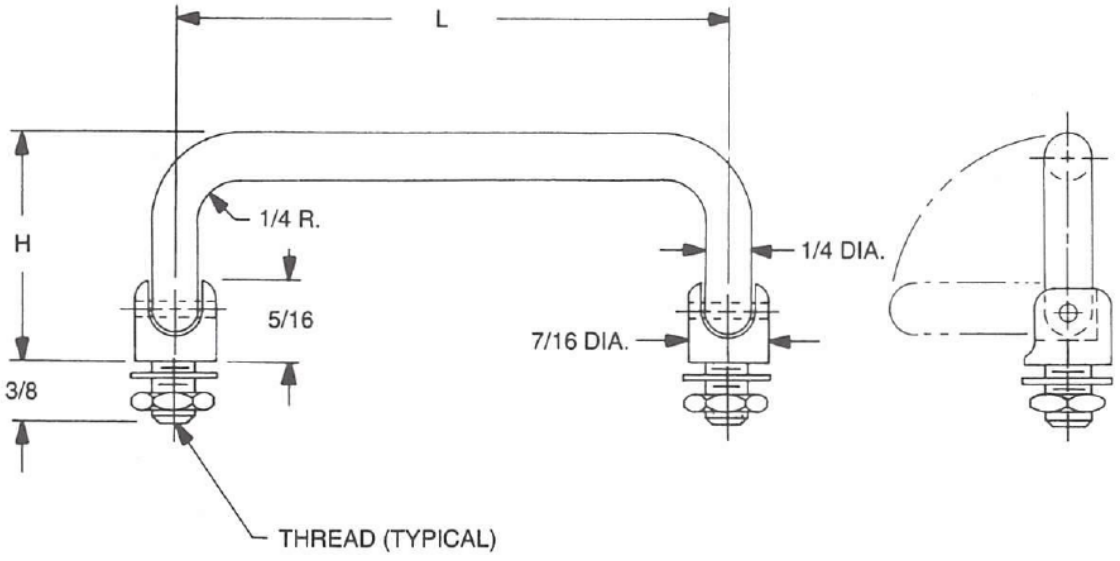

Refer to page 102 for Finish Codes.
Nuts and washers supplied. (Bulk Package)

PART NO.	L ± 1/64	H ± 1/32
11705	3"	
11706	3-1/2	
11707	4"	
11708	4-1/4	1.460
11709	4-1/2	
11710	5"	
11711	6"	

PART NUMBER ORDERING SYSTEM

XXXXX - X - XXXX - XX

PART NO. | MATERIAL | THREAD | FINISH

THREAD CODE	
THREAD	CODE
1/4-28	2528
5/16-24	3124

MATERIAL	CODE
Aluminum	A
Brass	B
Stainless Steel	SS
Steel	S

NOTE:
Metric size dimensions and threads available.
Please contact Sales Office.

5 Pasco Hill Road • Cromwell, CT 06416-1093
Phone: 860-828-0847 • Call Toll Free: 800-243-6032 • Fax: 860-828-0381
Web Address: http://www.amatom.com • E-Mail: sales@amatom.com

AMATOM®

5/16" ROUND HANDLES EXTERNAL THREADS - 90° FREE FALL

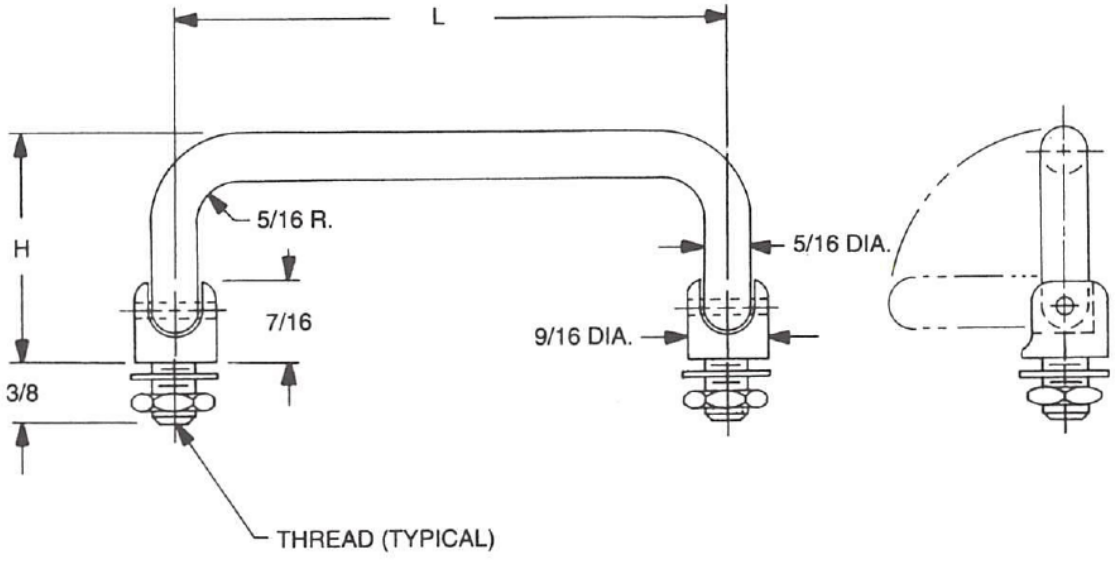

Refer to page 102 for Finish Codes.
Nuts and washers supplied. (Bulk Package)

PART NO.	L ± 1/64	H ± 1/32
11830	3"	1.531
11831	3-1/2	
11832	4"	
11833	4-1/4	
11834	4-1/2	
11835	5"	
11836	6"	
11840	3"	1.810
11841	3-1/2	
11842	4"	
11843	4-1/4	
11844	4-1/2	
11845	5"	
11846	6"	

PART NUMBER ORDERING SYSTEM

XXXXX - X - XXXX - XX

PART NO. | MATERIAL | THREAD | FINISH

THREAD CODE	
THREAD	CODE
5/16-24	3124
3/8-24	3724

MATERIAL	CODE
Aluminum	A
Brass	B
Stainless Steel	SS
Steel	S

NOTE:
Metric size dimensions and threads available.
Please contact Sales Office.

5 Pasco Hill Road • Cromwell, CT 06416-1093
Phone: 860-828-0847 • Call Toll Free: 800-243-6032 • Fax: 860-828-0381
Web Address: http://www.amatom.com • E-Mail: sales@amatom.com

3/8" ROUND HANDLES EXTERNAL THREADS - 90° FREE FALL

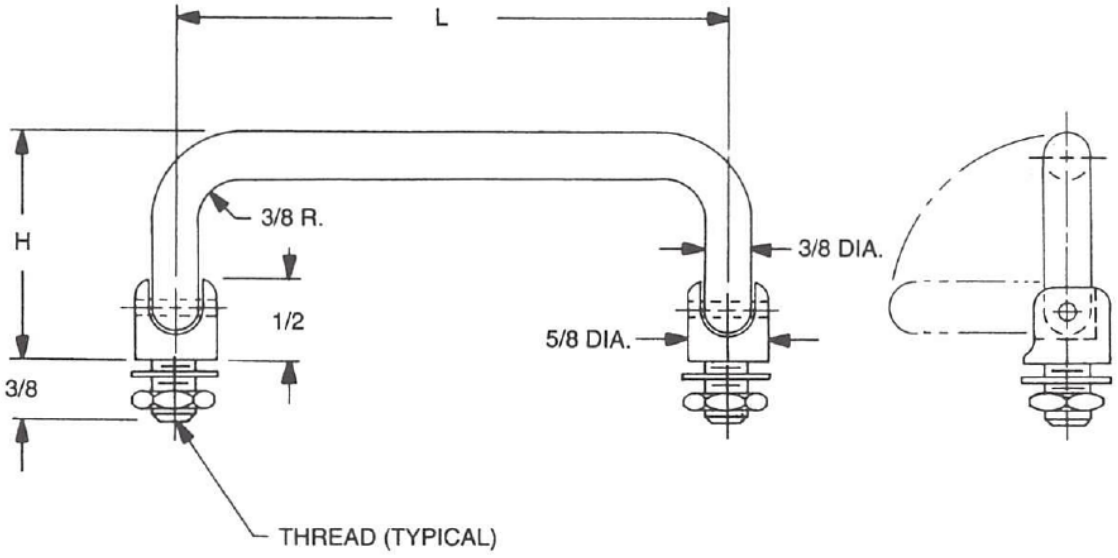

Refer to page 102 for Finish Codes.
Nuts and washers supplied. (Bulk Package)

PART NO.	L ± 1/64	H ± 1/32
11865	3"	1.531
11866	3-1/2	
11867	4"	
11868	4-1/4	
11869	4-1/2	
11870	5"	
11871	6"	
11875	3"	1.850
11876	3-1/2	
11877	4"	
11878	4-1/4	
11879	4-1/2	
11880	5"	
11881	6"	

PART NUMBER ORDERING SYSTEM

XXXXX - X - XXXX - XX

PART NO. | MATERIAL | THREAD | FINISH

THREAD CODE	
THREAD	CODE
5/16-24	3124
3/8-24	3724

MATERIAL	CODE
Aluminum	A
Brass	B
Stainless Steel	SS
Steel	S

NOTE:
Metric size dimensions and threads available.
Please contact Sales Office.

5 Pasco Hill Road • Cromwell, CT 06416-1093
Phone: 860-828-0847 • Call Toll Free: 800-243-6032 • Fax: 860-828-0381
Web Address: http://www.amatom.com • E-Mail: sales@amatom.com

AMATOM®

1/4" ROUND HANDLES EXTERNAL THREADS - 180° FREE FALL

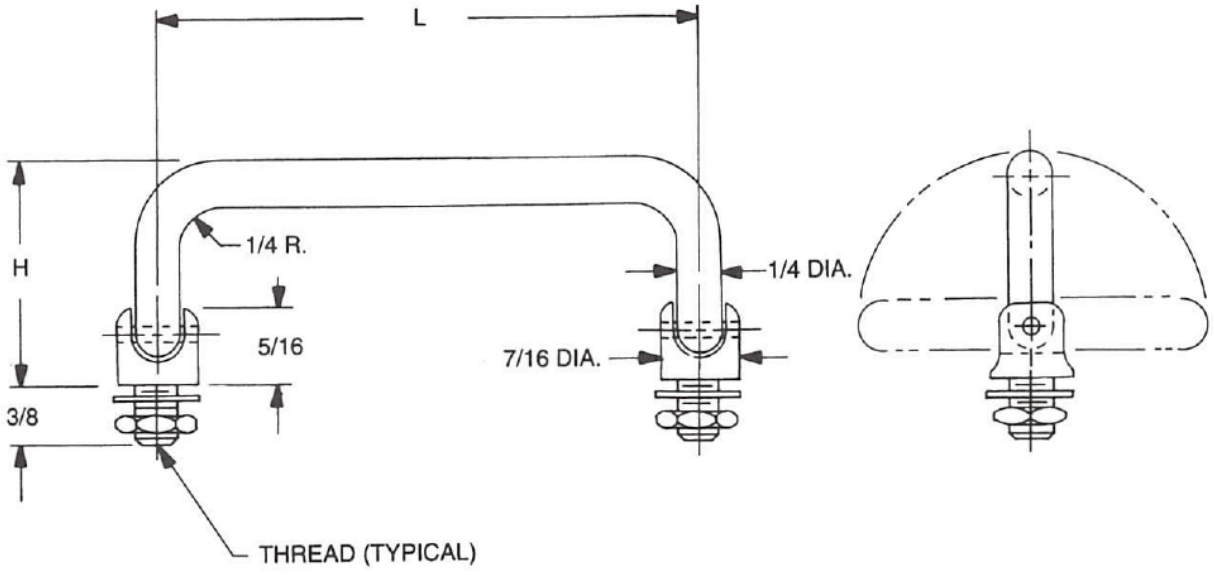

Refer to page 102 for Finish Codes.
Nuts and washers supplied. (Bulk Package)

PART NO.	L ± 1/64	H ± 1/32
11925	3"	
11926	3-1/2	
11927	4"	
11928	4-1/4	1.460
11929	4-1/2	
11930	5"	
11931	6"	

PART NUMBER ORDERING SYSTEM

XXXXX - X - XXXX - XX

PART NO. | MATERIAL | THREAD | FINISH

THREAD CODE	
THREAD	CODE
1/4-28	2528
5/16-24	3124

MATERIAL	CODE
Aluminum	A
Brass	B
Stainless Steel	SS
Steel	S

NOTE:
Metric size dimensions and threads available.
Please contact Sales Office.

5 Pasco Hill Road • Cromwell, CT 06416-1093
Phone: 860-828-0847 • Call Toll Free: 800-243-6032 • Fax: 860-828-0381
Web Address: http://www.amatom.com • E-Mail: sales@amatom.com

5/16" ROUND HANDLES EXTERNAL THREADS - 180° FREE FALL

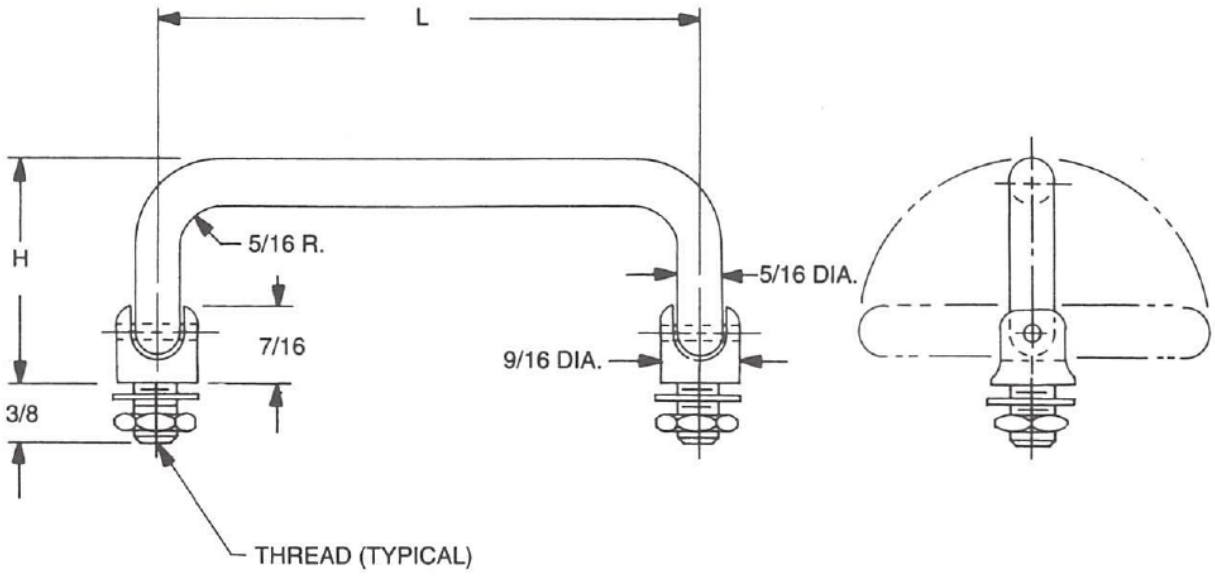

Refer to page 102 for Finish Codes.
Nuts and washers supplied. (Bulk Package)

PART NO.	L ± 1/64	H ± 1/32
11885	3"	1.531
11886	3-1/2	
11887	4"	
11888	4-1/4	
11889	4-1/2	
11890	5"	
11891	6"	
11895	3"	1.850
11896	3-1/2	
11897	4"	
11898	4-1/4	
11899	4-1/2	
11900	5"	
11901	6"	

PART NUMBER ORDERING SYSTEM

XXXXX - X - XXXX - XX

PART NO. | MATERIAL | THREAD | FINISH

THREAD CODE	
THREAD	CODE
5/16-24	3124
3/8-24	3724

MATERIAL	CODE
Aluminum	A
Brass	B
Stainless Steel	SS
Steel	S

NOTE:
Metric size dimensions and threads available.
Please contact Sales Office.

5 Pasco Hill Road • Cromwell, CT 06416-1093
Phone: 860-828-0847 • Call Toll Free: 800-243-6032 • Fax: 860-828-0381
Web Address: http://www.amatom.com • E-Mail: sales@amatom.com

AMATOM®

1/4" ROUND HANDLES EXTERNAL THREADS 90° INFINITE POSITION

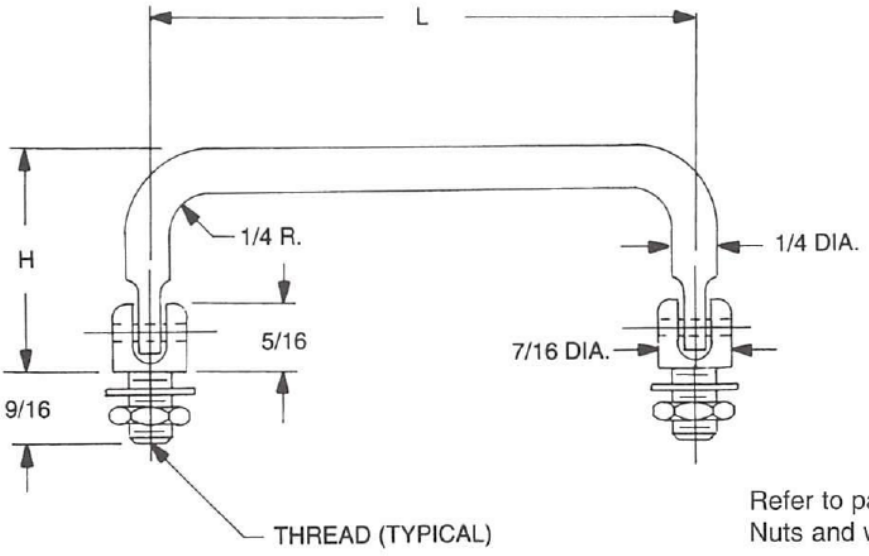

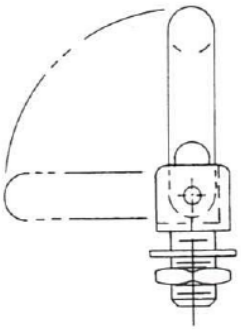

Refer to page 102 for Finish Codes.
Nuts and washers supplied. (Bulk Package)

PART NO.	L ± 1/64	H ± 1/32
11940	3"	
11941	3-1/2	
11942	4"	
11943	4-1/2	
11944	5"	1.460
11945	6"	
11946	7"	
11947	8"	
11948	9"	

PART NUMBER ORDERING SYSTEM

XXXXX - X - XXXX - XX

PART NO. | MATERIAL | THREAD | FINISH

THREAD CODE	
THREAD	CODE
1/4-28	2528
5/16-24	3124

MATERIAL	CODE
Aluminum	A
Brass	B
Stainless Steel	SS
Steel	S

NOTE:
Metric size dimensions and threads available.
Please contact Sales Office.

5 Pasco Hill Road • Cromwell, CT 06416-1093
Phone: 860-828-0847 • Call Toll Free: 800-243-6032 • Fax: 860-828-0381
Web Address: http://www.amatom.com • E-Mail: sales@amatom.com

5/16" ROUND HANDLES EXTERNAL THREADS 90° INFINITE POSITION

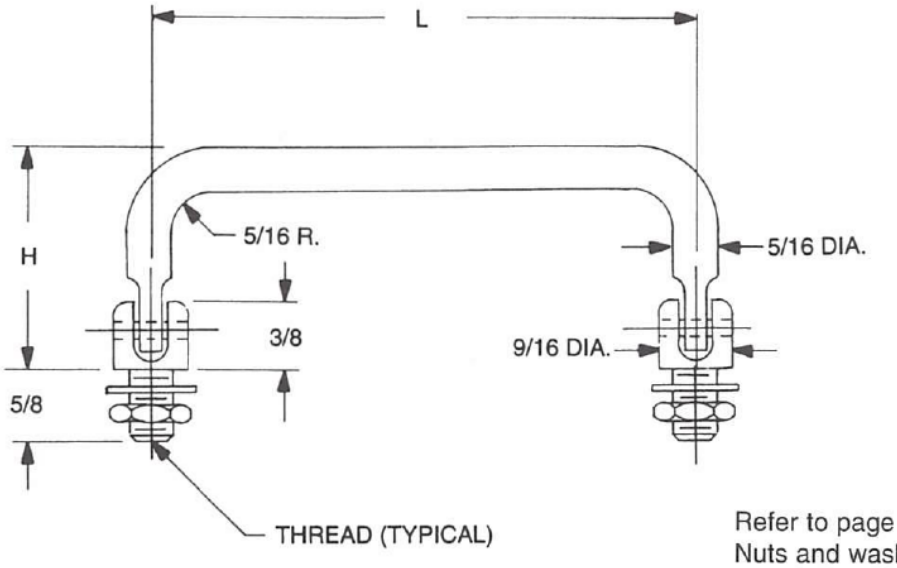

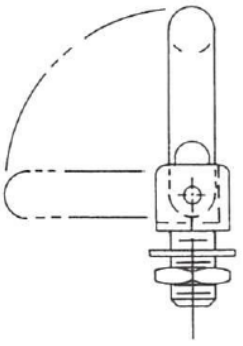

Refer to page 102 for Finish Codes.
Nuts and washers supplied. (Bulk Package)

PART NO.	L ± 1/64	H ± 1/32
11950	3"	
11951	3-1/2	
11952	4"	
11953	4-1/2	
11954	5"	1.620
11955	6"	
11956	7"	
11957	8"	
11958	9"	

PART NUMBER ORDERING SYSTEM

XXXXX - X - XXXX - XX

PART NO. | MATERIAL | THREAD | FINISH

THREAD CODE	
THREAD	CODE
5/16-24	3124
3/8-24	3724

MATERIAL	CODE
Aluminum	A
Brass	B
Stainless Steel	SS
Steel	S

NOTE:
Metric size dimensions and threads available.
Please contact Sales Office.

5 Pasco Hill Road • Cromwell, CT 06416-1093
Phone: 860-828-0847 • Call Toll Free: 800-243-6032 • Fax: 860-828-0381
Web Address: http://www.amatom.com • E-Mail: sales@amatom.com

AMATOM®

3/8" ROUND HANDLES EXTERNAL THREADS 90° INFINITE POSITION

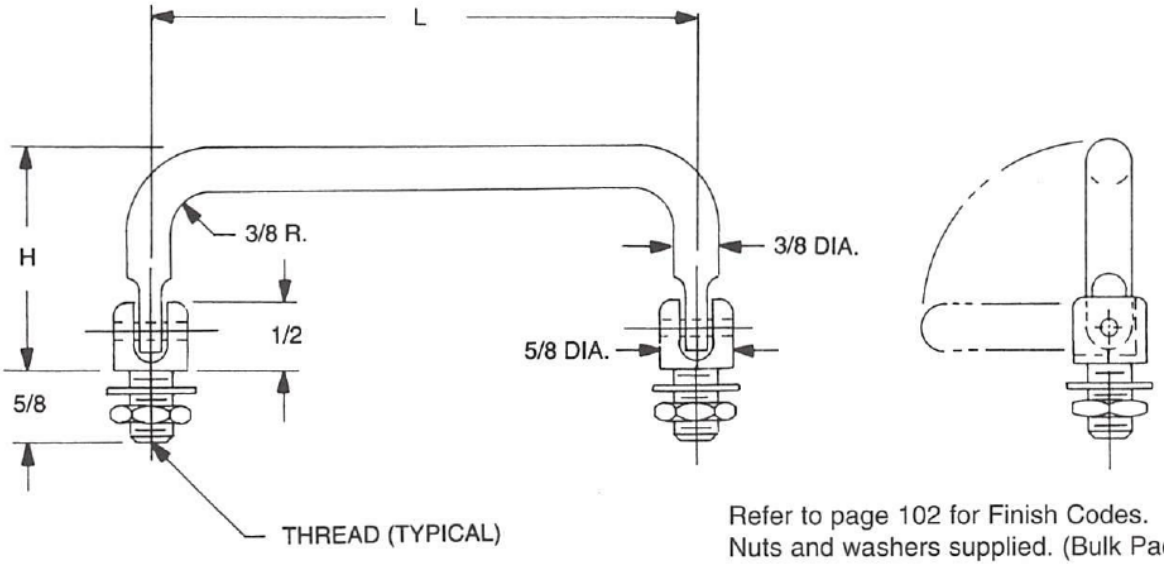

Refer to page 102 for Finish Codes.
Nuts and washers supplied. (Bulk Package)

PART NO.	L ± 1/64	H ± 1/32
11960	3"	
11961	3-1/2	
11962	4"	
11963	4-1/2	
11964	5"	1.810
11965	6"	
11966	7"	
11967	8"	
11968	9"	

PART NUMBER ORDERING SYSTEM

XXXXX - X - XXXX - XX

PART NO. | MATERIAL | THREAD | FINISH

THREAD CODE	
THREAD	CODE
5/16-24	3124
3/8-24	3724

MATERIAL	CODE
Aluminum	A
Brass	B
Stainless Steel	SS
Steel	S

NOTE:
Metric size dimensions and threads available.
Please contact Sales Office.

5 Pasco Hill Road • Cromwell, CT 06416-1093
Phone: 860-828-0847 • Call Toll Free: 800-243-6032 • Fax: 860-828-0381
Web Address: http://www.amatom.com • E-Mail: sales@amatom.com

1/4" ROUND HANDLES EXTERNAL THREADS 180° INFINITE POSITION

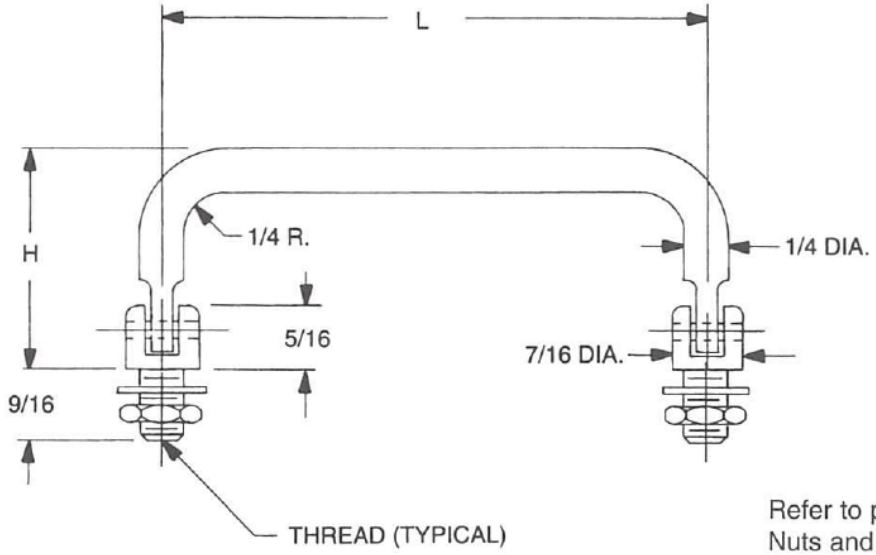

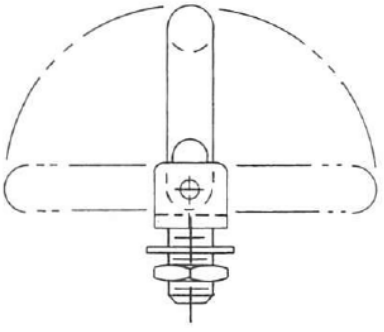

Refer to page 102 for Finish Codes.
Nuts and washers supplied. (Bulk Package)

PART NO.	L ± 1/64	H ± 1/32
11970	3"	
11971	3-1/2	
11972	4"	
11973	4-1/2	
11974	5"	1.460
11975	6"	
11976	7"	
11977	8"	
11978	9"	

PART NUMBER ORDERING SYSTEM

XXXXX - X - XXXX - XX

PART NO. | MATERIAL | THREAD | FINISH

THREAD CODE	
THREAD	CODE
1/4-28	2528
5/16-24	3124

MATERIAL	CODE
Aluminum	A
Brass	B
Stainless Steel	SS
Steel	S

NOTE:
Metric size dimensions and threads available.
Please contact Sales Office.

5 Pasco Hill Road • Cromwell, CT 06416-1093
Phone: 860-828-0847 • Call Toll Free: 800-243-6032 • Fax: 860-828-0381
Web Address: http://www.amatom.com • E-Mail: sales@amatom.com

AMATOM®

5/16" ROUND HANDLES EXTERNAL THREADS 180° INFINITE POSITION

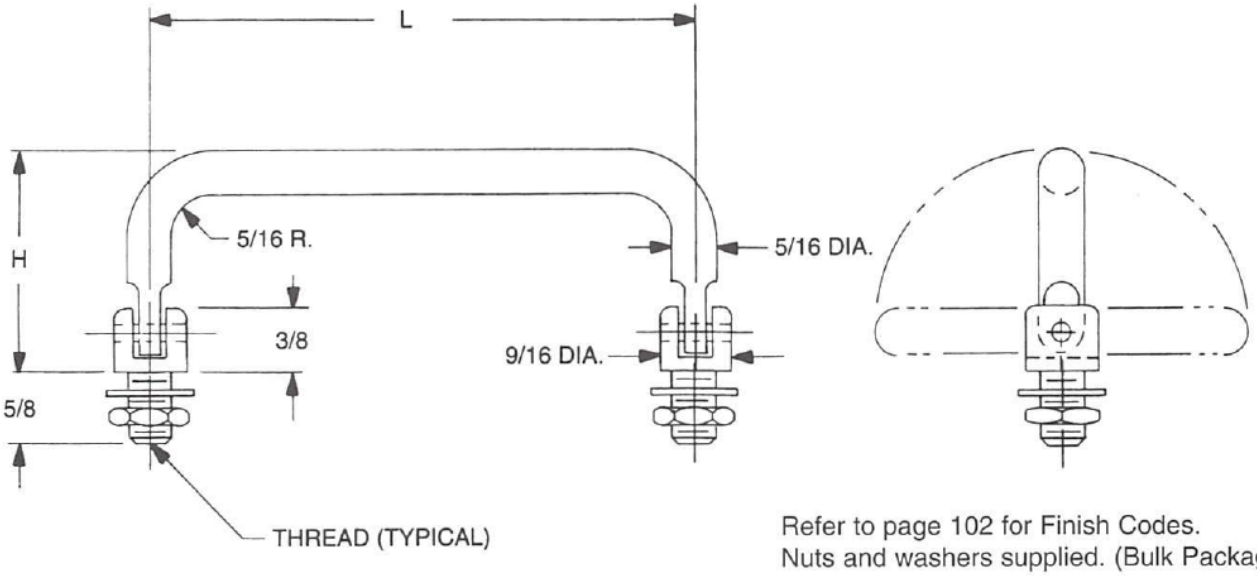

Refer to page 102 for Finish Codes.
Nuts and washers supplied. (Bulk Package)

PART NO.	L ± 1/64	H ± 1/32
11980	3"	
11981	3-1/2	
11982	4"	
11983	4-1/2	
11984	5"	1.620
11985	6"	
11986	7"	
11987	8"	
11988	9"	

PART NUMBER ORDERING SYSTEM

XXXXX - X - XXXX - XX

PART NO. | MATERIAL | THREAD | FINISH

THREAD CODE	
THREAD	CODE
5/16-24	3124
3/8-24	3724

MATERIAL	CODE
Aluminum	A
Brass	B
Stainless Steel	SS
Steel	S

NOTE:
Metric size dimensions and threads available.
Please contact Sales Office.

5 Pasco Hill Road • Cromwell, CT 06416-1093
Phone: 860-828-0847 • Call Toll Free: 800-243-6032 • Fax: 860-828-0381
Web Address: http://www.amatom.com • E-Mail: sales@amatom.com

3/8" ROUND HANDLES EXTERNAL THREADS 180° INFINITE POSITION

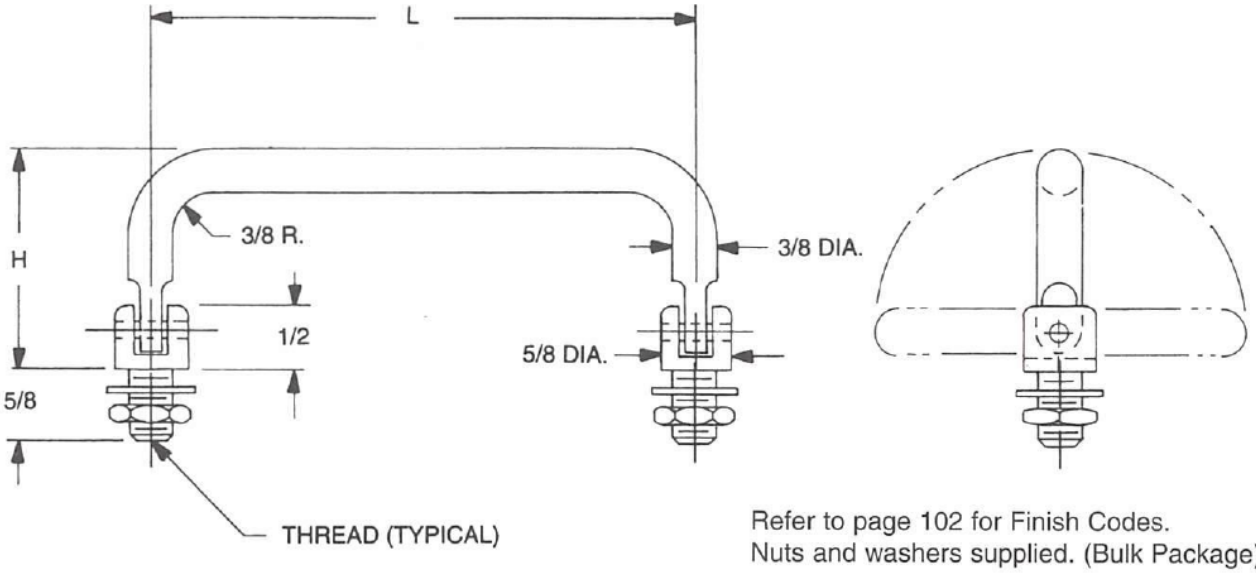

Refer to page 102 for Finish Codes.
Nuts and washers supplied. (Bulk Package)

PART NO.	L ± 1/64	H ± 1/32
11990	3"	
11991	3-1/2	
11992	4"	
11993	4-1/2	1.810
11994	5"	
11995	6"	
11996	7"	
11997	8"	
11998	9"	

PART NUMBER ORDERING SYSTEM

XXXXX - X - XXXX - XX

PART NO. | MATERIAL | THREAD | FINISH

THREAD CODE	
THREAD	CODE
5/16-24	3124
3/8-24	3724

MATERIAL	CODE
Aluminum	A
Brass	B
Stainless Steel	SS
Steel	S

NOTE:
Metric size dimensions and threads available.
Please contact Sales Office.

5 Pasco Hill Road • Cromwell, CT 06416-1093
Phone: 860-828-0847 • Call Toll Free: 800-243-6032 • Fax: 860-828-0381
Web Address: http://www.amatom.com • E-Mail: sales@amatom.com

AMATOM®

1/4" ROUND HANDLES EXTERNAL THREADS 90° 2 POSITION

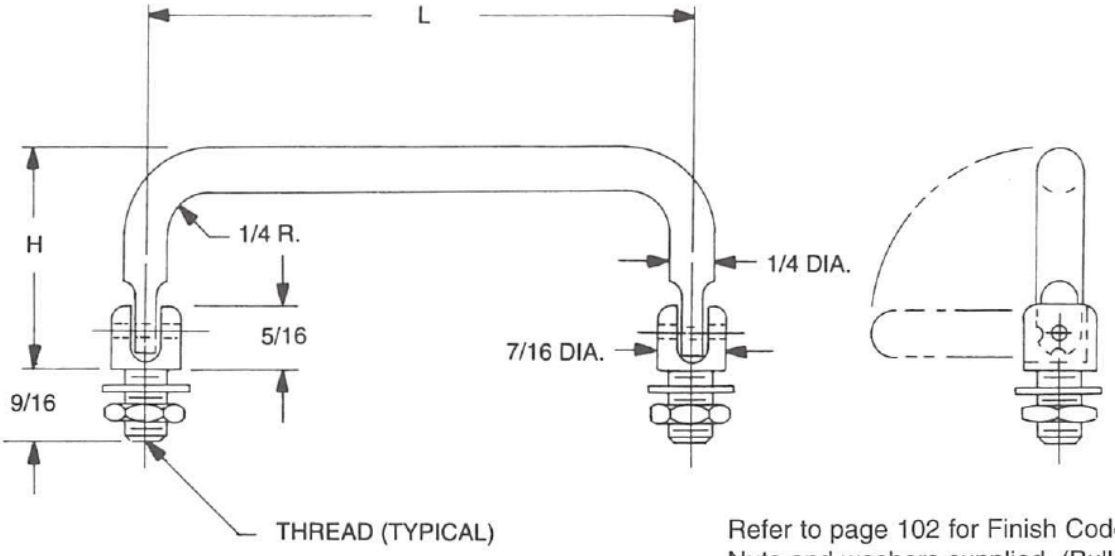

Refer to page 102 for Finish Codes.
Nuts and washers supplied. (Bulk Package)

PART NO.	L ± 1/64	H ± 1/32
12050	4"	
12051	4-1/4	
12052	4-1/2	
12053	5"	1.430
12054	6"	
12055	7"	
12056	8"	
12057	9"	
11725	3"	
11726	3-1/2	
11727	4"	
11728	4-1/4	1.460
11729	4-1/2	
11730	5"	
11731	6"	

PART NUMBER ORDERING SYSTEM

XXXXX - X - XXXX - XX

PART NO. | MATERIAL | THREAD | FINISH

THREAD CODE	
THREAD	CODE
1/4-28	2528
5/16-24	3124

MATERIAL	CODE
Aluminum	A
Brass	B
Stainless Steel	SS
Steel	S

NOTE:
Metric size dimensions and threads available.
Please contact Sales Office.

5 Pasco Hill Road • Cromwell, CT 06416-1093
Phone: 860-828-0847 • Call Toll Free: 800-243-6032 • Fax: 860-828-0381
Web Address: http://www.amatom.com • E-Mail: sales@amatom.com

5/16" ROUND HANDLES EXTERNAL THREADS 90° 2 POSITION

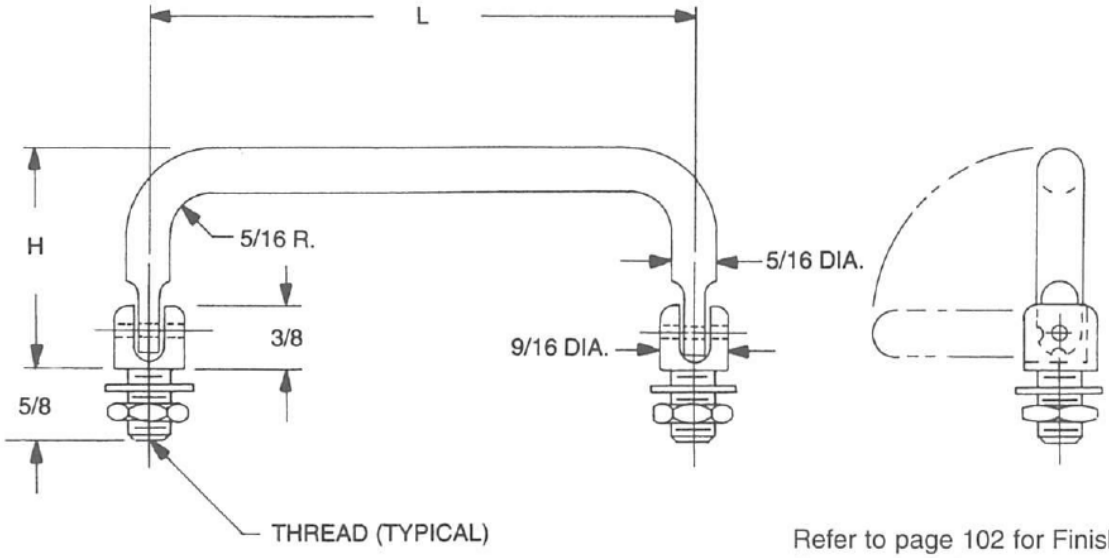

Refer to page 102 for Finish Codes.
Nuts and washers supplied. (Bulk Packa

PART NO.	L ± 1/64	H ± 1/32
11735	3"	1.530
11736	3-1/2	
11737	4"	
11738	4-1/4	
11739	4-1/2	
11740	5"	
11741	6"	
11745	3"	1.810
11746	3-1/2	
11747	4"	
11748	4-1/4	
11749	4-1/2	
11750	5"	
11751	6"	

PART NO.	L ± 1/64	H ± 1/32
12070	4"	1.843
12071	4-1/4	
12072	4-1/2	
12073	5"	
12074	6"	
12075	7"	
12076	8"	
12077	9"	

PART NUMBER ORDERING SYSTEM

XXXXX - X - XXXX - XX

PART NO. | MATERIAL | THREAD | FINISH

THREAD CODE	
THREAD	CODE
5/16-24	3124
3/8-24	3724

MATERIAL	CODE
Aluminum	A
Brass	B
Stainless Steel	SS
Steel	S

NOTE:
Metric size dimensions and threads available.
Please contact Sales Office.

5 Pasco Hill Road • Cromwell, CT 06416-1093
Phone: 860-828-0847 • Call Toll Free: 800-243-6032 • Fax: 860-828-0381
Web Address: http://www.amatom.com • E-Mail: sales@amatom.com

AMATOM®

3/8" ROUND HANDLES EXTERNAL THREADS 90° 2 POSITION

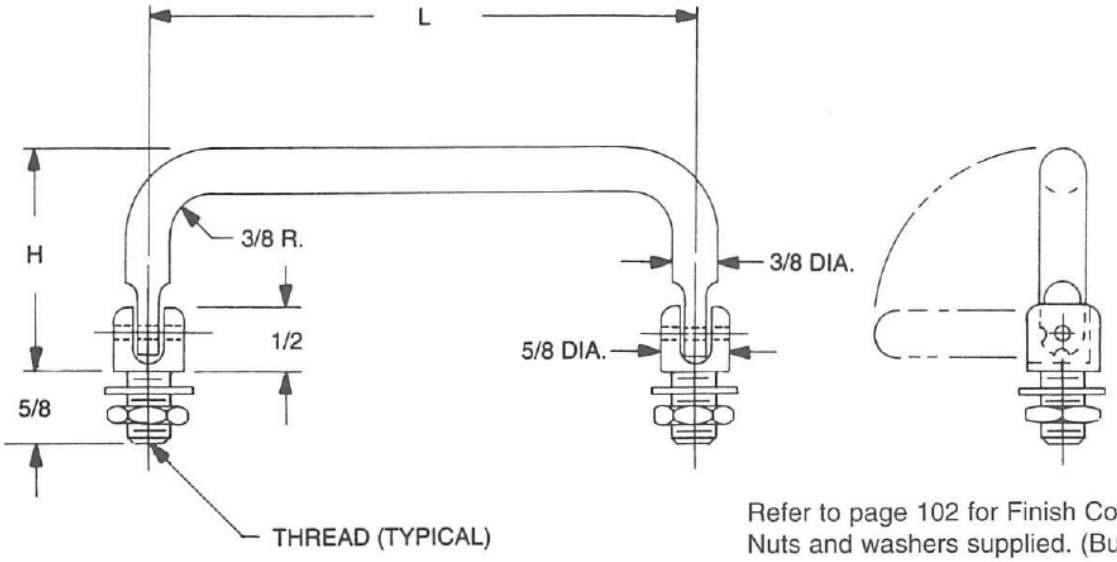

Refer to page 102 for Finish Codes.
Nuts and washers supplied. (Bulk Package)

PART NO.	L ± 1/64	H ± 1/32
11755	3"	1.530
11756	3-1/2	
11757	4"	
11758	4-1/4	
11759	4-1/2	
11760	5"	
11761	6"	
12080	4"	1.625
12081	4-1/4	
12082	4-1/2	
12083	5"	
12084	6"	
12085	7"	
12086	8"	
12087	9"	
12090	4"	1.810
12091	4-1/4	
12092	4-1/2	
12093	5"	
12094	6"	
12095	7"	
12096	8"	
12097	9"	

PART NO.	L ± 1/64	H ± 1/32
12100	4"	1.843
12101	4-1/4	
12102	4-1/2	
12103	5"	
12104	6"	
12105	7"	
12106	8"	
12107	9"	
11765	3"	1.850
11766	3-1/2	
11767	4"	
11768	4-1/4	
11769	4-1/2	
11770	5"	
11771	6"	
12110	4"	2.375
12111	4-1/4	
12112	4-1/2	
12113	5"	
12114	6"	
12115	7"	
12116	8"	
12117	9"	

PART NUMBER ORDERING SYSTEM

XXXXX - X - XXXX - XX

PART NO. | MATERIAL | THREAD | FINISH

THREAD CODE	
THREAD	CODE
5/16-24	3124
3/8-24	3724

MATERIAL	CODE
Aluminum	A
Brass	B
Stainless Steel	SS
Steel	S

NOTE:
Metric size dimensions and threads available.
Please contact Sales Office.

5 Pasco Hill Road • Cromwell, CT 06416-1093
Phone: 860-828-0847 • Call Toll Free: 800-243-6032 • Fax: 860-828-0381
Web Address: http://www.amatom.com • E-Mail: sales@amatom.com

1/4" ROUND HANDLES EXTERNAL THREADS 180° 3 POSITION

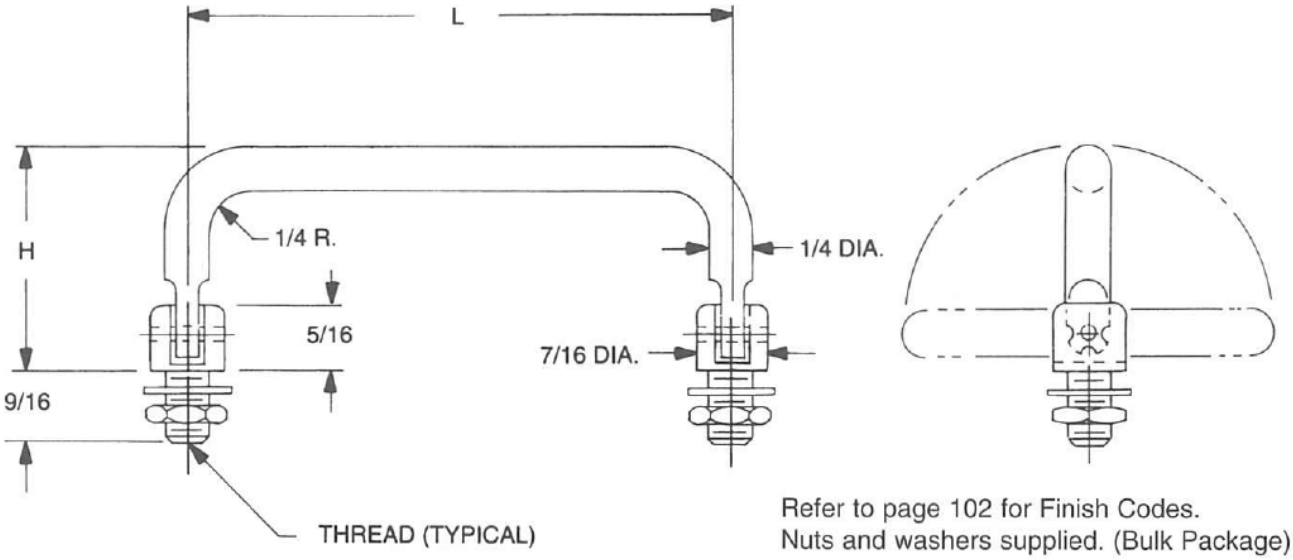

Refer to page 102 for Finish Codes.
Nuts and washers supplied. (Bulk Package)

PART NO.	L ± 1/64	H ± 1/32
12145	4"	
12146	4-1/4	
12147	4-1/2	
12148	5"	1.430
12149	6"	
12150	7"	
12151	8"	
11775	3"	
11776	3-1/2	
11777	4"	
11778	4-1/4	1.460
11779	4-1/2	
11780	5"	
11781	6"	

PART NUMBER ORDERING SYSTEM

XXXXX - X - XXXX - XX

PART NO. | MATERIAL | THREAD | FINISH

THREAD CODE	
THREAD	CODE
1/4-28	2528
5/16-24	3124

MATERIAL	CODE
Aluminum	A
Brass	B
Stainless Steel	SS
Steel	S

5 Pasco Hill Road • Cromwell, CT 06416-1093
Phone: 860-828-0847 • Call Toll Free: 800-243-6032 • Fax: 860-828-0381
Web Address: http://www.amatom.com • E-Mail: sales@amatom.com

AMATOM®

5/16" ROUND HANDLES EXTERNAL THREADS 180° 3 POSITION

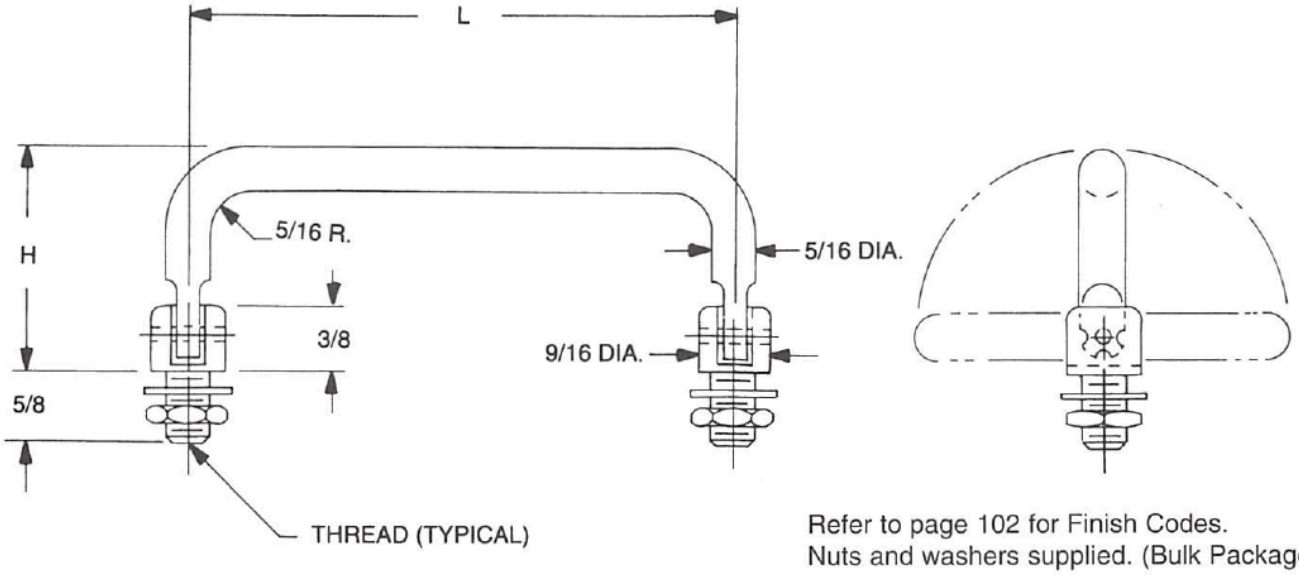

Refer to page 102 for Finish Codes.
Nuts and washers supplied. (Bulk Package)

PART NO.	L ± 1/64	H ± 1/32
12165	4"	
12166	4-1/4	
12167	4-1/2	
12168	5"	1.430
12169	6"	
12170	7"	
12171	8"	
11785	3"	
11786	3-1/2	
11787	4"	
11788	4-1/4	1.530
11789	4-1/2	
11790	5"	
11791	6"	
11795	3"	
11796	3-1/2	
11797	4"	
11798	4-1/4	1.850
11799	4-1/2	
11800	5"	
11801	6"	

PART NUMBER ORDERING SYSTEM

XXXXX - X - XXXX - XX

PART NO. | MATERIAL | THREAD | FINISH

THREAD CODE	
THREAD	CODE
1/4-28	2528
5/16-24	3124
3/8-24	3724

MATERIAL	CODE
Aluminum	A
Brass	B
Stainless Steel	SS
Steel	S

NOTE:
Metric size dimensions and threads available.
Please contact Sales Office.

5 Pasco Hill Road • Cromwell, CT 06416-1093
Phone: 860-828-0847 • Call Toll Free: 800-243-6032 • Fax: 860-828-0381
Web Address: http://www.amatom.com • E-Mail: sales@amatom.com

3/8" ROUND HANDLES EXTERNAL THREADS 180° 3 POSITION

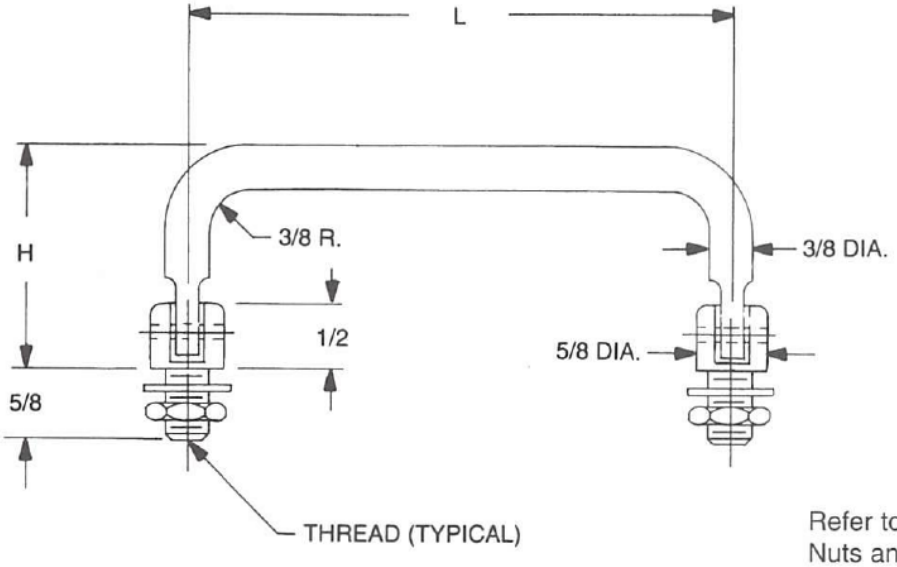

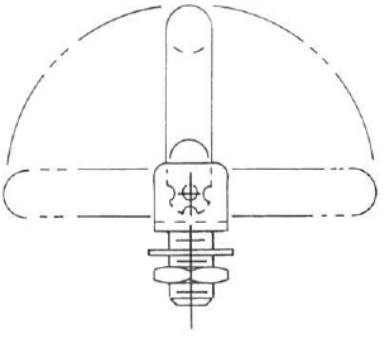

Refer to page 102 for Finish Codes.
Nuts and washers supplied. (Bulk Package)

PART NO.	L ± 1/64	H ± 1/32
11805	3"	1.530
11806	3-1/2	
11807	4"	
11808	4-1/4	
11809	4-1/2	
11810	5"	
11811	6"	
12175	4"	1.810
12176	4-1/4	
12177	4-1/2	
12178	5"	
12179	6"	
12180	7"	
12181	8"	

PART NO.	L ± 1/64	H ± 1/32
11815	3"	1.850
11816	3-1/2	
11817	4"	
11818	4-1/4	
11819	4-1/2	
11820	5"	
11821	6"	
11850	4"	2.375
11851	4-1/4	
11852	4-1/2	
11853	5"	
11854	6"	
11855	7"	
11856	8"	

PART NUMBER ORDERING SYSTEM

XXXXX - X - XXXX - XX

PART NO. | MATERIAL | THREAD | FINISH

THREAD CODE	
THREAD	CODE
5/16-24	3124
3/8-24	3724

MATERIAL	CODE
Aluminum	A
Brass	B
Stainless Steel	SS
Steel	S

NOTE:
Metric size dimensions and threads available.
Please contact Sales Office.

5 Pasco Hill Road • Cromwell, CT 06416-1093
Phone: 860-828-0847 • Call Toll Free: 800-243-6032 • Fax: 860-828-0381
Web Address: http://www.amatom.com • E-Mail: sales@amatom.com

AMATOM®

7/16" x 9/32" OVAL HANDLES EXTERNAL THREADS 90° 2 POSITION

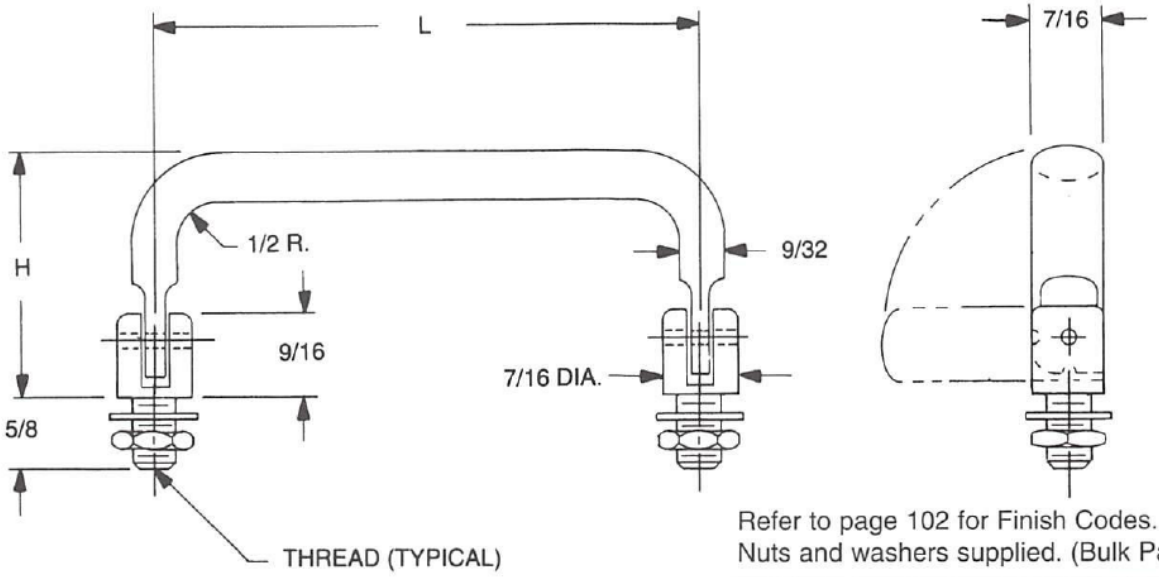

Refer to page 102 for Finish Codes.
Nuts and washers supplied. (Bulk Package)

PART NO.	L ± 1/64	H ± 1/32
12220	3"	
12221	4"	
12222	4-1/4	
12223	4-1/2	1.695
12224	5"	
12225	6"	
12226	7"	
12227	8"	
12230	3"	
12231	4"	
12232	4-1/4	
12233	4-1/2	1.791
12234	5"	
12235	6"	
12236	7"	
12237	8"	

PART NO.	L ± 1/64	H ± 1/32
12240	3"	
12241	4"	
12242	4-1/4	
12243	4-1/2	1.843
12244	5"	
12245	6"	
12246	7"	
12247	8"	
12250	3"	
12251	4"	
12252	4-1/4	
12253	4-1/2	2.125
12254	5"	
12255	6"	
12256	7"	
12257	8"	

PART NUMBER ORDERING SYSTEM

XXXXX - X - XXXX - XX

PART NO. | MATERIAL | THREAD | FINISH

THREAD CODE	
THREAD	CODE
5/16-24	3124
3/8-24	3724

MATERIAL	CODE
Aluminum	A
Brass	B
Stainless Steel	SS

NOTE:
Metric size dimensions and threads available.
Please contact Sales Office.

5 Pasco Hill Road • Cromwell, CT 06416-1093
Phone: 860-828-0847 • Call Toll Free: 800-243-6032 • Fax: 860-828-0381
Web Address: http://www.amatom.com • E-Mail: sales@amatom.com

AMATOM®

5/8" x 9/32" OVAL HANDLES EXTERNAL THREADS 90° 2 POSITION

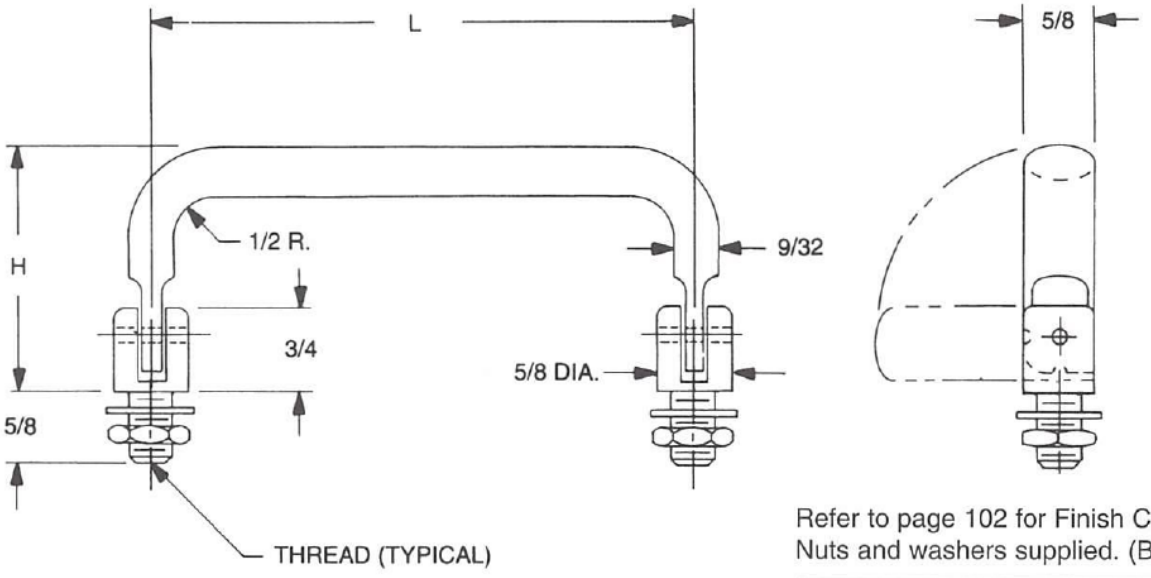

Refer to page 102 for Finish Codes.
Nuts and washers supplied. (Bulk Package)

PART NO.	L ± 1/64	H ± 1/32
12350	3"	
12351	4"	
12352	4-1/4	
12353	4-1/2	1.695
12354	5"	
12355	6"	
12356	7"	
12357	8"	
12360	3"	
12361	4"	
12362	4-1/4	
12363	4-1/2	1.791
12364	5"	
12365	6"	
12366	7"	
12367	8"	

PART NO.	L ± 1/64	H ± 1/32
12370	3"	
12371	4"	
12372	4-1/4	
12373	4-1/2	1.843
12374	5"	
12375	6"	
12376	7"	
12377	8"	
12380	3"	
12381	4"	
12382	4-1/4	
12383	4-1/2	2.125
12384	5"	
12385	6"	
12386	7"	
12387	8"	

PART NUMBER ORDERING SYSTEM

XXXXX - X - XXXX - XX

PART NO. | MATERIAL | THREAD | FINISH

THREAD CODE	
THREAD	CODE
5/16-24	3124
3/8-24	3724

MATERIAL	CODE
Aluminum	A
Brass	B
Stainless Steel	SS

NOTE:
Metric size dimensions and threads available.
Please contact Sales Office.

5 Pasco Hill Road • Cromwell, CT 06416-1093
Phone: 860-828-0847 • Call Toll Free: 800-243-6032 • Fax: 860-828-0381
Web Address: http://www.amatom.com • E-Mail: sales@amatom.com

AMATOM®

5/8" x 3/8" OVAL HANDLES EXTERNAL THREADS 90° 2 POSITION

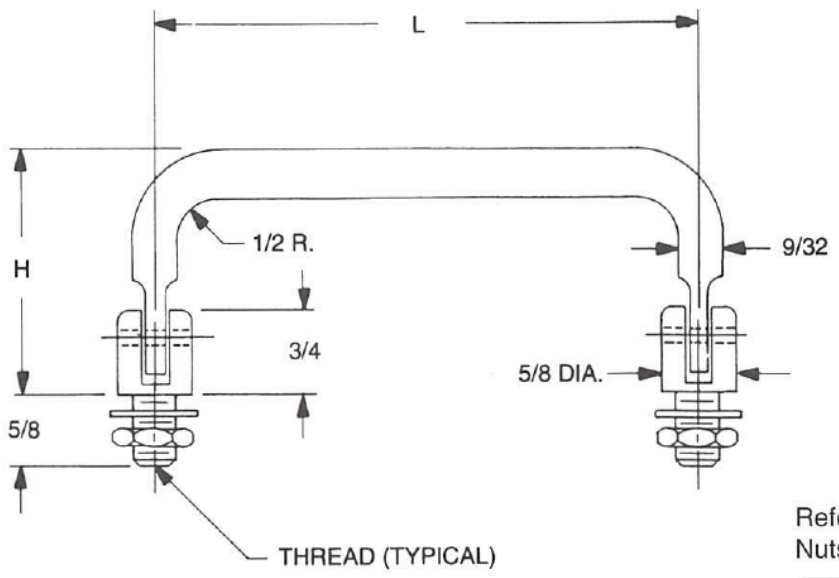

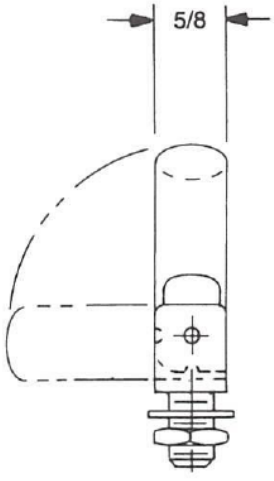

Refer to page 102 for Finish Codes.
Nuts and washers supplied. (Bulk Package)

PART NO.	L ± 1/64	H ± 1/32
12410	3"	1.695
12411	4"	
12412	4-1/4	
12413	4-1/2	
12414	5"	
12415	6"	
12416	7"	
12417	8"	
12420	3"	1.791
12421	4"	
12422	4-1/4	
12423	4-1/2	
12424	5"	
12425	6"	
12426	7"	
12427	8"	

PART NO.	L ± 1/64	H ± 1/32
12430	3"	1.843
12431	4"	
12432	4-1/4	
12433	4-1/2	
12434	5"	
12435	6"	
12436	7"	
12437	8"	
12440	3"	2.125
12441	4"	
12442	4-1/4	
12443	4-1/2	
12444	5"	
12445	6"	
12446	7"	
12447	8"	

PART NUMBER ORDERING SYSTEM

XXXXX - X - XXXX - XX

PART NO. | MATERIAL | THREAD | FINISH

THREAD CODE	
THREAD	CODE
5/16-24	3124
3/8-24	3724

MATERIAL	CODE
Aluminum	A
Brass	B

NOTE:
Metric size dimensions and threads available.
Please contact Sales Office.

5 Pasco Hill Road • Cromwell, CT 06416-1093
Phone: 860-828-0847 • Call Toll Free: 800-243-6032 • Fax: 860-828-0381
Web Address: http://www.amatom.com • E-Mail: sales@amatom.com

AMATOM®

7/16" x 9/32" OVAL HANDLES EXTERNAL THREADS 180° 3 POSITION

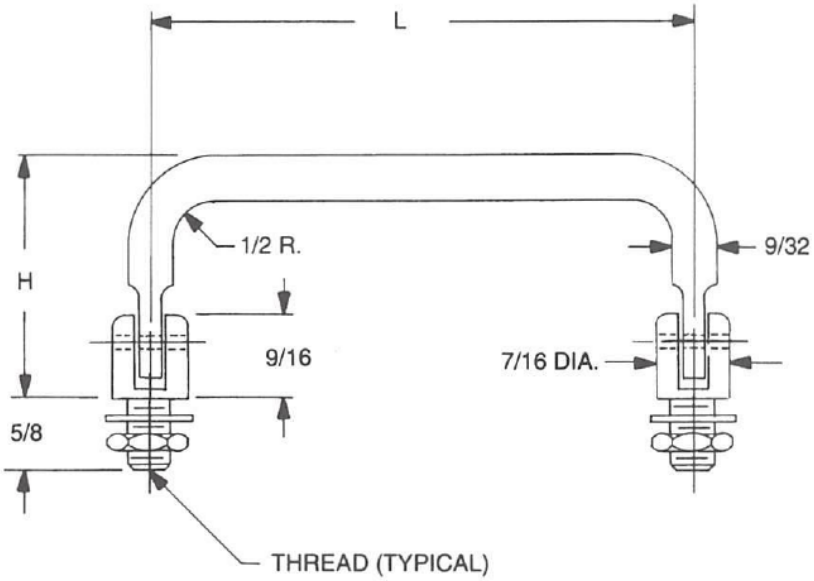

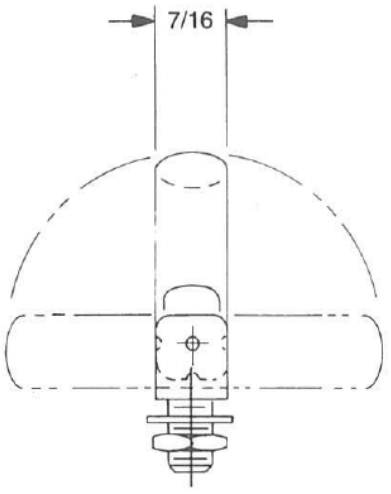

Refer to page 102 for Finish Codes.
Nuts and washers supplied. (Bulk Package)

PART NO.	L ± 1/64	H ± 1/32
12475	3"	
12476	4"	
12477	4-1/4	
12478	4-1/2	1.695
12479	5"	
12480	6"	
12481	7"	
12482	8"	
12485	3"	
12486	4"	
12487	4-1/4	
12488	4-1/2	1.791
12489	5"	
12490	6"	
12491	7"	
12492	8"	

PART NO.	L ± 1/64	H ± 1/32
12495	3"	
12496	4"	
12497	4-1/4	
12498	4-1/2	1.843
12499	5"	
12500	6"	
12501	7"	
12502	8"	
12505	3"	
12506	4"	
12507	4-1/4	
12508	4-1/2	2.125
12509	5"	
12510	6"	
12511	7"	
12512	8"	

PART NUMBER ORDERING SYSTEM

XXXXX - X - XXXX - XX

PART NO. | MATERIAL | THREAD | FINISH

THREAD CODE	
THREAD	CODE
5/16-24	3124
3/8-24	3724

MATERIAL	CODE
Aluminum	A
Brass	B
Stainless Steel	SS

NOTE:
Metric size dimensions and threads available.
Please contact Sales Office.

5 Pasco Hill Road • Cromwell, CT 06416-1093
Phone: 860-828-0847 • Call Toll Free: 800-243-6032 • Fax: 860-828-0381
Web Address: http://www.amatom.com • E-Mail: sales@amatom.com

AMATOM®

5/8" x 9/32" OVAL HANDLES EXTERNAL THREADS 180° 3 POSITION

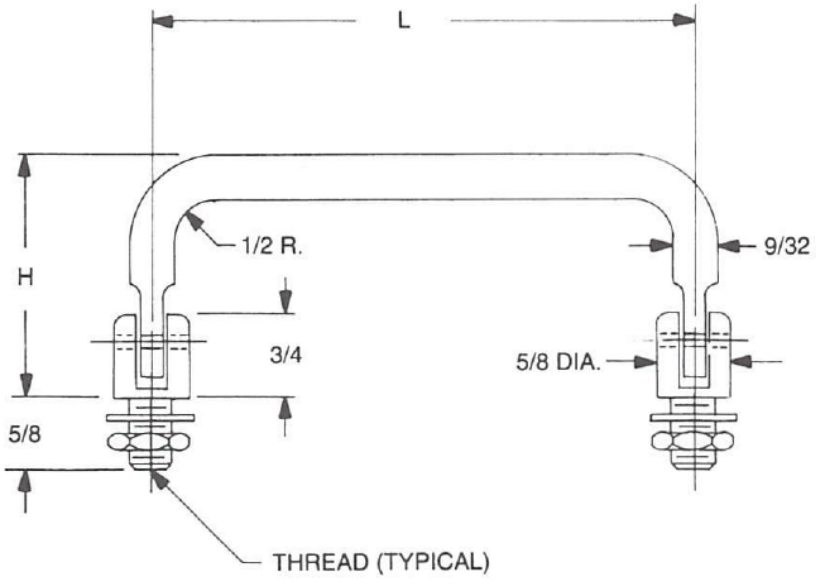

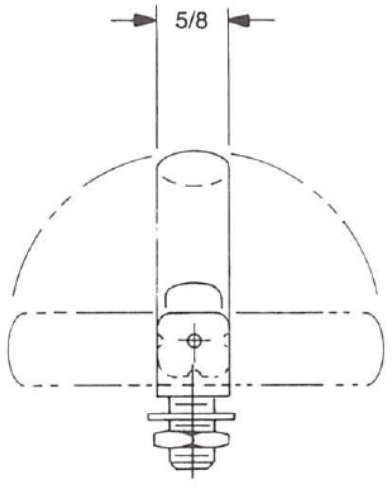

Refer to page 102 for Finish Codes.
Nuts and washers supplied. (Bulk Package)

PART NO.	L ± 1/64	H ± 1/32
12610	3"	1.695
12611	4"	
12612	4-1/4	
12613	4-1/2	
12614	5"	
12615	6"	
12616	7"	
12617	8"	
12620	3"	1.791
12621	4"	
12622	4-1/4	
12623	4-1/2	
12624	5"	
12625	6"	
12626	7"	
12627	8"	

PART NO.	L ± 1/64	H ± 1/32
12630	3"	1.843
12631	4"	
12632	4-1/4	
12633	4-1/2	
12634	5"	
12635	6"	
12636	7"	
12637	8"	
12640	3"	2.125
12641	4"	
12642	4-1/4	
12643	4-1/2	
12644	5"	
12645	6"	
12646	7"	
12647	8"	

PART NUMBER ORDERING SYSTEM

XXXXX - X - XXXX - XX

PART NO. | MATERIAL | THREAD | FINISH

THREAD CODE	
THREAD	CODE
5/16-24	3124
3/8-24	3724

MATERIAL	CODE
Aluminum	A
Brass	B

NOTE:
Metric size dimensions and threads available.
Please contact Sales Office.

5 Pasco Hill Road • Cromwell, CT 06416-1093
Phone: 860-828-0847 • Call Toll Free: 800-243-6032 • Fax: 860-828-0381
Web Address: http://www.amatom.com • E-Mail: sales@amatom.com

5/8" x 3/8" OVAL HANDLES EXTERNAL THREADS 180° 3 POSITION

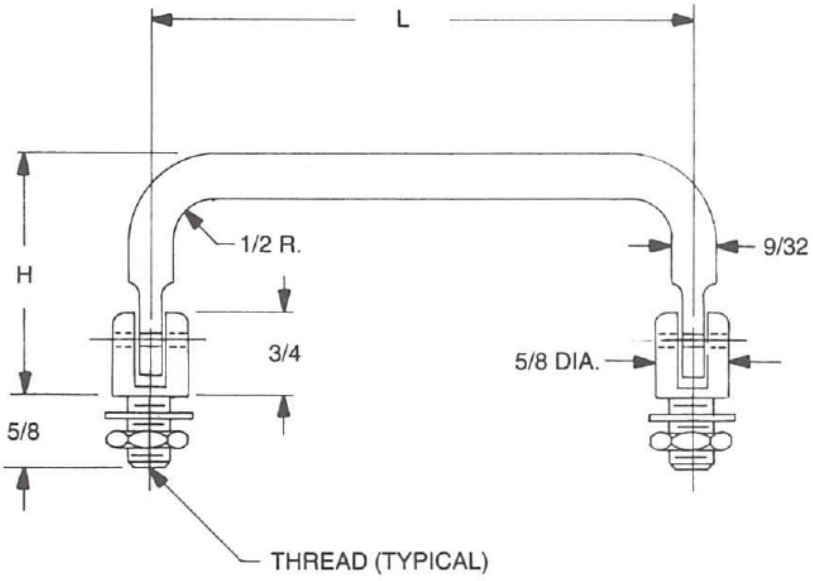

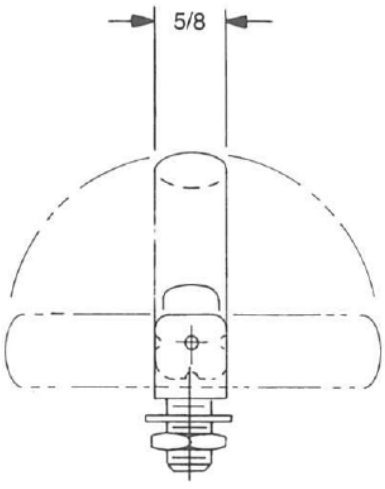

Refer to page 102 for Finish Codes.
Nuts and washers supplied. (Bulk Package)

PART NO.	L ± 1/64	H ± 1/32
12670	3"	
12671	4"	
12672	4-1/4	
12673	4-1/2	1.695
12674	5"	
12675	6"	
12676	7"	
12677	8"	
12680	3"	
12681	4"	
12682	4-1/4	
12683	4-1/2	1.791
12684	5"	
12685	6"	
12686	7"	
12687	8"	

PART NO.	L ± 1/64	H ± 1/32
12690	3"	
12691	4"	
12692	4-1/4	
12693	4-1/2	1.843
12694	5"	
12695	6"	
12696	7"	
12697	8"	
12700	3"	
12701	4"	
12702	4-1/4	
12703	4-1/2	2.125
12704	5"	
12705	6"	
12706	7"	
12707	8"	

PART NUMBER ORDERING SYSTEM

XXXXX - X - XXXX - XX

PART NO. | MATERIAL | THREAD | FINISH

THREAD CODE	
THREAD	CODE
5/16-24	3124
3/8-24	3724

MATERIAL	CODE
Aluminum	A
Brass	B

NOTE:
Metric size dimensions and threads available.
Please contact Sales Office.

5 Pasco Hill Road • Cromwell, CT 06416-1093
Phone: 860-828-0847 • Call Toll Free: 800-243-6032 • Fax: 860-828-0381
Web Address: http://www.amatom.com • E-Mail: sales@amatom.com

AMATOM®

7/16" x 9/32" OVAL HANDLES INTERNAL THREADS 180° INFINITE POSITION

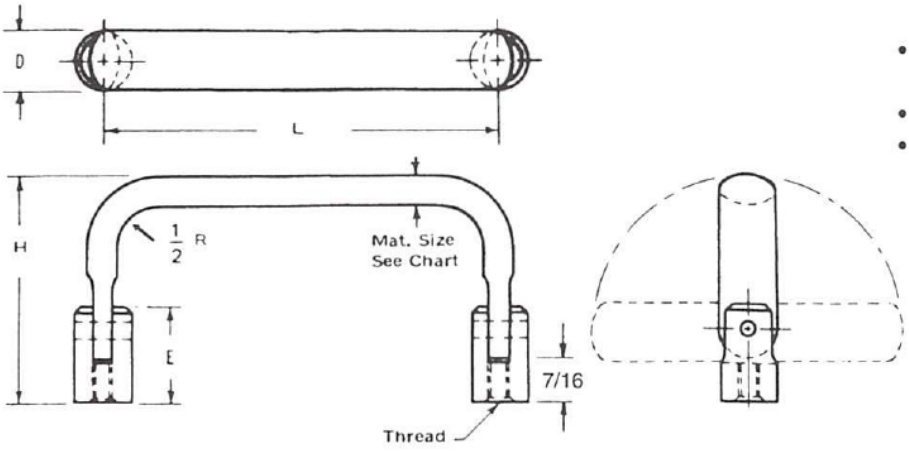

- Custom or Special Handles to meet specific requirements can be supplied.
- Tolerances see page 101.
- Refer to page 102 for Finish Codes.

PART NO.	L ± 1/64	H ± 1/32
12740	2"	2"
12741	3"	
12742	4"	
12743	5"	
12744	6"	
12745	7"	
12746	8"	
12750	2"	2-1/2
12751	3"	
12752	4"	
12753	5"	
12754	6"	
12755	7"	
12756	8"	
12760	2"	3"
12761	3"	
12762	4"	
12763	5"	
12764	6"	
12765	7"	
12766	8"	

PART NUMBER ORDERING SYSTEM

XXXXX - X - XXXX - XX

PART NO. | MATERIAL | THREAD | FINISH

THREAD CODE	
THREAD	CODE
8-32	0832
10-32	1032

MATERIAL	CODE
Aluminum	A
Brass	B
Stainless Steel	SS

NOTE:
Metric size dimensions and threads available.
Please contact Sales Office.

5 Pasco Hill Road • Cromwell, CT 06416-1093
Phone: 860-828-0847 • Call Toll Free: 800-243-6032 • Fax: 860-828-0381
Web Address: http://www.amatom.com • E-Mail: sales@amatom.com

AMATOM®

5/8" x 9/32" OVAL HANDLES INTERNAL THREADS 180° INFINITE POSITION

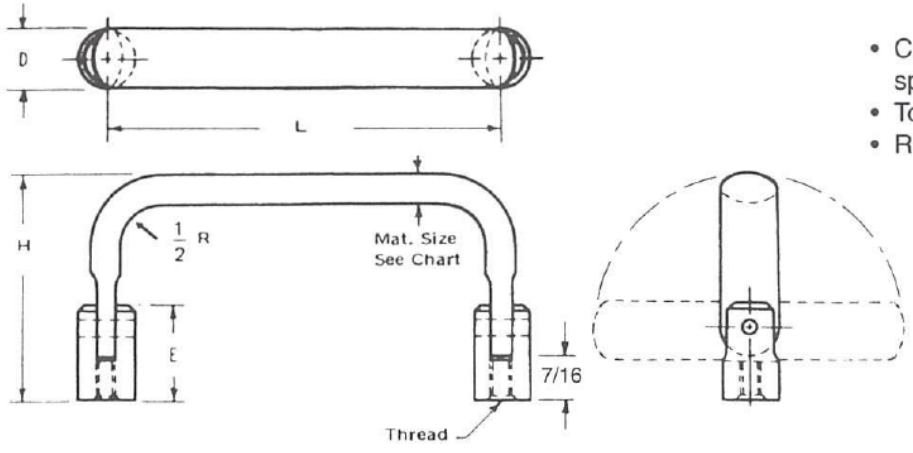

- Custom or Special Handles to meet specific requirements can be supplied.
- Tolerances see page 101.
- Refer to page 102 for Finish Codes.

PART NO.	L ± 1/64	H ± 1/32
12840	2"	2"
12841	3"	
12842	4"	
12843	5"	
12844	6"	
12845	7"	
12846	8"	
12850	2"	2-1/2
12851	3"	
12852	4"	
12853	5"	
12854	6"	
12855	7"	
12856	8"	
12860	2"	3"
12861	3"	
12862	4"	
12863	5"	
12864	6"	
12865	7"	
12866	8"	

PART NUMBER ORDERING SYSTEM

XXXXX - X - XXXX - XX

PART NO. | MATERIAL | THREAD | FINISH

THREAD CODE	
THREAD	CODE
8-32	0832
10-32	1032

MATERIAL	CODE
Aluminum	A
Brass	B
Stainless Steel	SS

NOTE:
Metric size dimensions and threads available.
Please contact Sales Office.

5 Pasco Hill Road • Cromwell, CT 06416-1093
Phone: 860-828-0847 • Call Toll Free: 800-243-6032 • Fax: 860-828-0381
Web Address: http://www.amatom.com • E-Mail: sales@amatom.com

AMATOM®

5/8" x 3/8" OVAL HANDLES INTERNAL THREADS 180° INFINITE POSITION

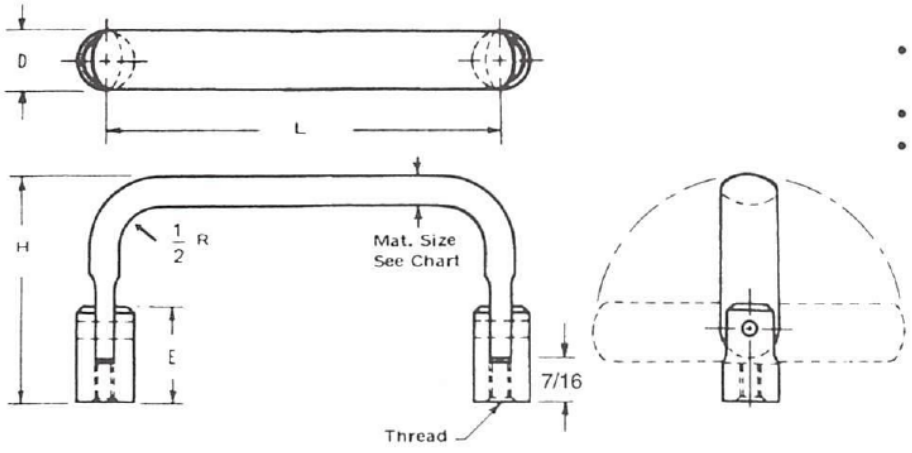

- Custom or Special Handles to meet specific requirements can be supplied.
- Tolerances see page 101.
- Refer to page 102 for Finish Codes.

PART NO.	L ± 1/64	H ± 1/32
12890	2"	2"
12891	3"	
12892	4"	
12893	5"	
12894	6"	
12895	7"	
12896	8"	
12900	2"	2-1/2
12901	3"	
12902	4"	
12903	5"	
12904	6"	
12905	7"	
12906	8"	
12910	2"	3"
12911	3"	
12912	4"	
12913	5"	
12914	6"	
12915	7"	
12916	8"	

PART NUMBER ORDERING SYSTEM

XXXXX - X - XXXX - XX

PART NO. | MATERIAL | THREAD | FINISH

THREAD CODE	
THREAD	CODE
8-32	0832
10-32	1032

MATERIAL	CODE
Aluminum	A
Brass	B

NOTE:
Metric size dimensions and threads available.
Please contact Sales Office.

5 Pasco Hill Road • Cromwell, CT 06416-1093
Phone: 860-828-0847 • Call Toll Free: 800-243-6032 • Fax: 860-828-0381
Web Address: http://www.amatom.com • E-Mail: sales@amatom.com

1/2" x 3/16" RECTANGULAR HANDLES INTERNAL THREADS 180° INFINITE POSITION

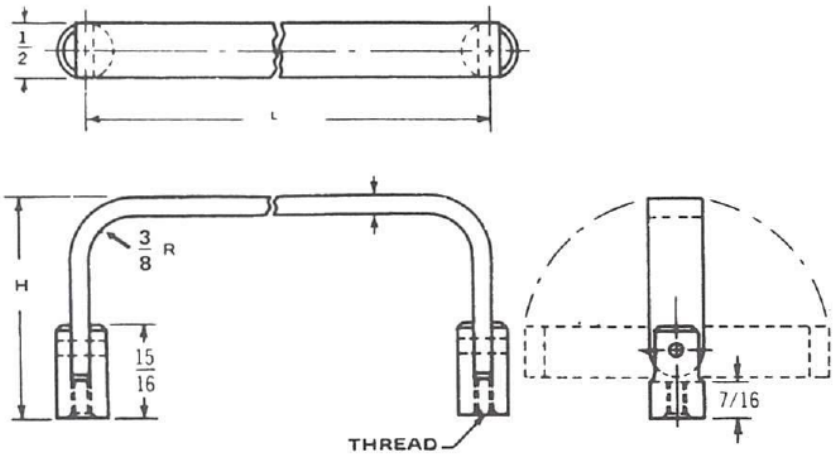

PART NO.	L ± 1/64	H ± 1/32
13020	3"	1-1/2
13021	3-3/4	
13022	4"	
13023	4-1/4	
13024	4-1/2	
13025	5"	
13026	5-1/2	
13027	6"	
13028	7"	
13029	8"	
13030	9"	
13031	10"	
13050	3"	2-1/16
13051	3-3/4	
13052	4"	
13053	4-1/4	
13054	4-1/2	
13055	5"	
13056	5-1/2	
13057	6"	
13058	7"	
13059	8"	
13060	9"	
13061	10"	

PART NO.	L ± 1/64	H ± 1/32
13035	3"	2"
13036	3-3/4	
13037	4"	
13038	4-1/4	
13039	4-1/2	
13040	5"	
13041	5-1/2	
13042	6"	
13044	8"	
13045	9"	
13046	10"	
13065	3"	2-1/2
13066	3-3/4	
13067	4"	
13068	4-1/4	
13069	4-1/2	
13070	5"	
13071	5-1/2	
13072	6"	
13073	7"	
13074	8"	
13075	9"	
13076	10"	

PART NUMBER ORDERING SYSTEM

XXXXX - X - XXXX - XX

PART NO. | MATERIAL | THREAD | FINISH

THREAD CODE	
THREAD	CODE
8-32	0832
10-32	1032

MATERIAL	CODE
Aluminum	A
Brass	B
Stainless Steel	SS

NOTE:
Metric size dimensions and threads available.
Please contact Sales Office.

5 Pasco Hill Road • Cromwell, CT 06416-1093
Phone: 860-828-0847 • Call Toll Free: 800-243-6032 • Fax: 860-828-0381
Web Address: http://www.amatom.com • E-Mail: sales@amatom.com

AMATOM®

3/16" ROUND HANDLES OFFSET TYPE INTERNAL THREADS

DIA. ROD	OFFSET O ± 1/16	OFFSET LGTH. B ± 3/32
3/16	5/16	9/16

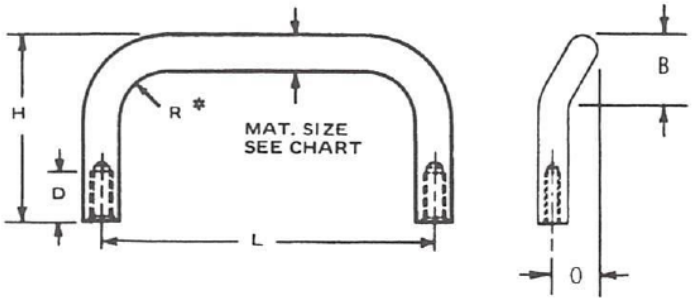

- Custom or Special Handles to meet specific requirements can be supplied.
- Tolerances see page 101.
- Refer to page 102 for Finish Codes.
- Depth of Thread (D) see Chart B page 101.
- Radius is approx. same as O.D. of material.

PART NUMBER ORDERING SYSTEM

XXXXX - X - XXXX - XX

PART NO. | MATERIAL | THREAD | FINISH

PART NO.	L ± 1/64	H ± 1/32
13110	2"	1"
13111	3"	
13112	4"	
13113	4-1/2	
13114	5"	
13115	6"	
13120	2"	1-1/2
13121	3"	
13122	4"	
13123	4-1/2	
13124	5"	
13125	6"	

THREAD CODE	
THREAD	CODE
4-40	0440
6-32	0632

MATERIAL	CODE
Aluminum	A
Brass	B
Stainless Steel	SS
Steel	S

NOTE:
Metric size dimensions and threads available.
Please contact Sales Office.

5 Pasco Hill Road • Cromwell, CT 06416-1093
Phone: 860-828-0847 • Call Toll Free: 800-243-6032 • Fax: 860-828-0381
Web Address: http://www.amatom.com • E-Mail: sales@amatom.com

1/4" ROUND HANDLES OFFSET TYPE INTERNAL THREADS

DIA. ROD	OFFSET O ± 1/16	OFFSET LGTH. B ± 3/32
1/4	3/8	11/16

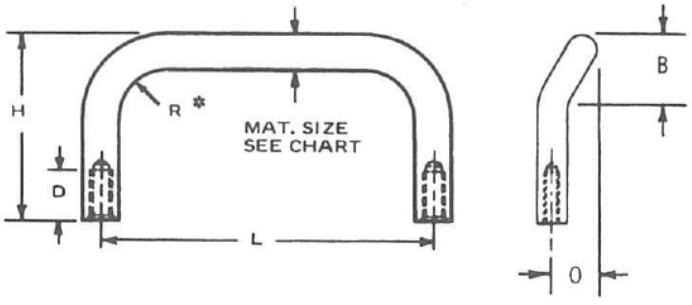

- Custom or Special Handles to meet specific requirements can be supplied.
- Tolerances see page 101.
- Refer to page 102 for Finish Codes.
- Depth of Thread (D) see Chart B page 101.
- Radius is approx. same as O.D. of material.

PART NO.	L ± 1/64	H ± 1/32
13155	2"	1"
13156	3"	
13157	4"	
13158	4-1/2	
13159	5"	
13160	6"	
13165	2"	1-1/2
13166	3"	
13167	4"	
13168	4-1/2	
13169	5"	
13170	5-1/2	
13171	6"	
13175	2"	2"
13176	3"	
13177	4"	
13178	4-1/2	
13179	5"	
13180	6"	

PART NUMBER ORDERING SYSTEM

XXXXX - X - XXXX - XX

PART NO. | MATERIAL | THREAD | FINISH

THREAD CODE	
THREAD	CODE
6-32	0632
8-32	0832

MATERIAL	CODE
Aluminum	A
Brass	B
Stainless Steel	SS
Steel	S

NOTE:
Metric size dimensions and threads available.
Please contact Sales Office.

5 Pasco Hill Road • Cromwell, CT 06416-1093
Phone: 860-828-0847 • Call Toll Free: 800-243-6032 • Fax: 860-828-0381
Web Address: http://www.amatom.com • E-Mail: sales@amatom.com

AMATOM®

5/16" ROUND HANDLES OFFSET TYPE INTERNAL THREADS

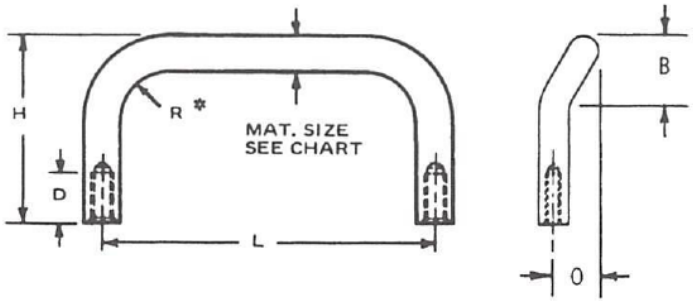

DIA. ROD	OFFSET 0 ± 1/16	OFFSET LGTH. B ± 3/32
5/16	1/2	7/8

- Custom or Special Handles to meet specific requirements can be supplied.
- Tolerances see page 101.
- Refer to page 102 for Finish Codes.
- Depth of Thread (D) see Chart B page 101.
- Radius is approx. same as O.D. of material.

PART NO.	L ± 1/64	H ± 1/32
13210	2"	1-5/16
13211	2-1/2	
13212	3"	
13213	4"	
13214	5"	
13215	6"	
13220	3"	1-1/2
13221	4"	
13222	4-1/4	
13223	4-1/2	
13224	4-9/16	
13225	5"	
13226	5-1/2	
13227	6"	
13228	7"	
13229	8"	
13230	9"	
13231	10"	
13235	3"	1-3/4
13236	4"	
13237	4-1/4	
13238	4-1/2	
13239	4-9/16	
13240	5"	
13241	5-1/2	
13242	6"	
13243	6-1/2	
13244	7"	
13245	8"	
13246	9"	
13247	10"	

PART NO.	L ± 1/64	H ± 1/32
13250	3"	2"
13251	4"	
13252	4-1/4	
13253	4-1/2	
13254	4-9/16	
13255	5"	
13256	5-1/2	
13257	6"	
13258	6-1/2	
13259	7"	
13260	8"	
13261	9"	
13262	10"	
13265	3"	2-1/2
13266	4"	
13267	4-1/4	
13268	4-1/2	
13269	4-9/16	
13270	5"	
13271	5-1/2	
13272	6"	
13273	6-1/2	
13274	7"	
13275	8"	
13276	9"	
13277	10"	

PART NUMBER ORDERING SYSTEM

XXXXX - X - XXXX - XX

PART NO. | MATERIAL | THREAD | FINISH

THREAD CODE	
THREAD	CODE
8-32	0832
10-32	1032

MATERIAL	CODE
Aluminum	A
Brass	B
Stainless Steel	SS
Steel	S

NOTE:
Metric size dimensions and threads available.
Please contact Sales Office.

5 Pasco Hill Road • Cromwell, CT 06416-1093
Phone: 860-828-0847 • Call Toll Free: 800-243-6032 • Fax: 860-828-0381
Web Address: http://www.amatom.com • E-Mail: sales@amatom.com

3/8" ROUND HANDLES OFFSET TYPE INTERNAL THREADS

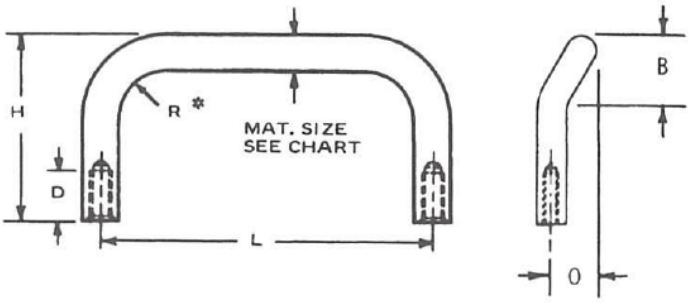

DIA. ROD	OFFSET 0 ± 1/16	OFFSET LGTH. B ± 3/32
3/8	5/8	1-1/16

- Custom or Special Handles to meet specific requirements can be supplied.
- Tolerances see page 101.
- Refer to page 102 for Finish Codes.
- Depth of Thread (D) see Chart B page 101.
- Radius is approx. same as O.D. of material.

PART NO.	L ± 1/64	H ± 1/32
13310	3"	
13311	4"	
13312	4-1/4	
13313	4-1/2	
13314	4-9/16	
13315	5"	
13316	5-1/2	1-3/4
13317	6"	
13318	6-1/2	
13319	7"	
13320	8"	
13321	9"	
13322	10"	
13325	3"	
13326	4"	
13327	4-1/4	
13328	4-1/2	
13329	4-9/16	
13330	5"	
13331	5-1/2	2"
13332	6"	
13333	6-1/2	
13334	7"	
13335	8"	
13336	9"	
13337	10"	

PART NO.	L ± 1/64	H ± 1/32
13340	3"	
13341	4"	
13342	4-1/4	
13343	4-1/2	
13344	4-9/16	
13345	5"	
13346	5-1/2	2-1/2
13347	6"	
13348	6-1/2	
13349	7"	
13350	8"	
13351	9"	
13352	10"	

PART NUMBER ORDERING SYSTEM

XXXXX - X - XXXX - XX

PART NO. | MATERIAL | THREAD | FINISH

THREAD CODE	
THREAD	CODE
8-32	0832
10-32	1032

MATERIAL	CODE
Aluminum	A
Brass	B
Stainless Steel	SS
Steel	S

NOTE:
Metric size dimensions and threads available.
Please contact Sales Office.

5 Pasco Hill Road • Cromwell, CT 06416-1093
Phone: 860-828-0847 • Call Toll Free: 800-243-6032 • Fax: 860-828-0381
Web Address: http://www.amatom.com • E-Mail: sales@amatom.com

AMATOM®

7/16" x 9/32" OVAL SLANTED TYPE INTERNAL THREADS

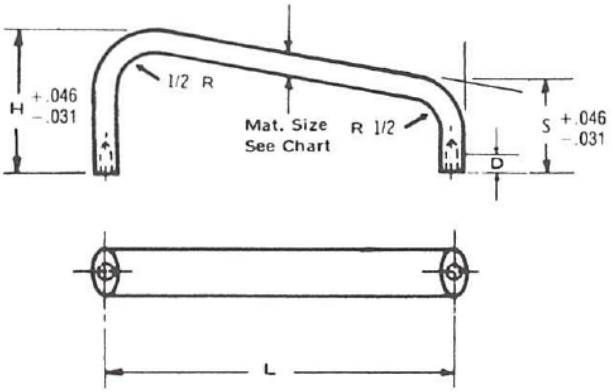

NOTE: DEPTH OF THREAD (D): Where "S" is 1" high and under, thread will be 3/8 deep, both legs.
"S" will be constant at 1/2" less than "H".

PART NO.	L ± 1/64	H ± 1/32
13385	3"	
13386	3-1/2	
13387	4"	
13388	4-9/16	
13389	5"	
13390	6"	1-1/2
13391	6-7/16	
13392	7"	
13393	8"	
13394	9"	
13395	10"	
13400	3"	
13401	3-1/2	
13402	4"	
13403	4-9/16	
13404	5"	
13405	6"	1-5/8
13406	6-7/16	
13407	7"	
13408	8"	
13409	9"	
13410	10"	

PART NO.	L ± 1/64	H ± 1/32
13415	3"	
13416	3-1/2	
13417	4"	
13418	4-9/16	
13419	5"	
13420	6"	1-3/4
13421	6-7/16	
13422	7"	
13423	8"	
13424	9"	
13425	10"	
13430	3"	
13431	3-1/2	
13432	4"	
13433	4-9/16	
13434	5"	
13435	6"	2"
13436	6-7/16	
13437	7"	
13438	8"	
13439	9"	
13440	10"	

PART NUMBER ORDERING SYSTEM

XXXXX - X - XXXX - XX

PART NO. | MATERIAL | THREAD | FINISH

THREAD CODE	
THREAD	CODE
10-24	1024
10-32	1032

MATERIAL	CODE
Aluminum	A
Brass	B
Stainless Steel	SS

NOTE:
Metric size dimensions and threads available.
Please contact Sales Office.

5 Pasco Hill Road • Cromwell, CT 06416-1093
Phone: 860-828-0847 • Call Toll Free: 800-243-6032 • Fax: 860-828-0381
Web Address: http://www.amatom.com • E-Mail: sales@amatom.com

5/8" x 9/32" OVAL SLANTED TYPE INTERNAL THREADS

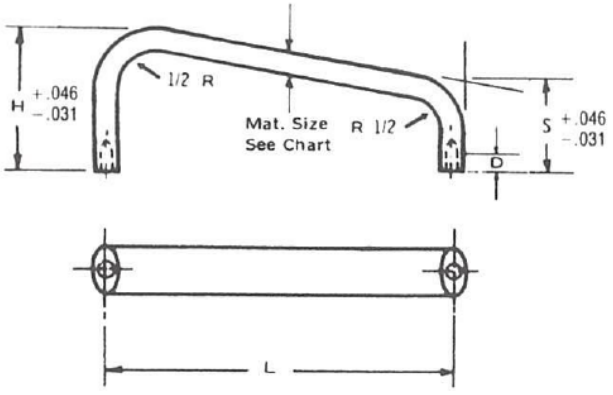

NOTE: DEPTH OF THREAD (D): Where "S" is 1" high and under, thread will be 3/8 deep, both legs.
"S" will be constant at 1/2" less than "H".

PART NO.	L ± 1/64	H ± 1/32
13470	3"	1-1/2
13471	3-1/2	
13472	4"	
13473	4-9/16	
13474	5"	
13475	6"	
13476	6-7/16	
13477	7"	
13478	8"	
13479	9"	
13480	10"	
13485	3"	1-5/8
13486	3-1/2	
13487	4"	
13488	4-9/16	
13489	5"	
13490	6"	
13491	6-7/16	
13492	7"	
13493	8"	
13494	9"	
13495	10"	
13500	3"	1-3/4
13501	3-1/2	
13502	4"	
13503	4-9/16	
13504	5"	
13505	6"	
13506	6-7/16	
13507	7"	
13508	8"	
13509	9"	
13510	10"	

PART NO.	L ± 1/64	H ± 1/32
13515	3"	1-7/8
13516	3-1/2	
13517	4"	
13518	4-9/16	
13519	5"	
13520	6"	
13521	6-7/16	
13522	7"	
13523	8"	
13524	9"	
13525	10"	
13530	3"	2"
13531	3-1/2	
13532	4"	
13533	4-9/16	
13534	5"	
13535	6"	
13536	6-7/16	
13537	7"	
13538	8"	
13539	9"	
13540	10"	

PART NUMBER ORDERING SYSTEM

XXXXX - X - XXXX - XX

PART NO. | MATERIAL | THREAD | FINISH

THREAD CODE	
THREAD	CODE
10-24	1024
10-32	1032

MATERIAL	CODE
Aluminum	A
Brass	B
Stainless Steel	SS

NOTE:
Metric size dimensions and threads available.
Please contact Sales Office.

5 Pasco Hill Road • Cromwell, CT 06416-1093
Phone: 860-828-0847 • Call Toll Free: 800-243-6032 • Fax: 860-828-0381
Web Address: http://www.amatom.com • E-Mail: sales@amatom.com

AMATOM®

5/8" x 3/8" OVAL SLANTED TYPE INTERNAL THREADS

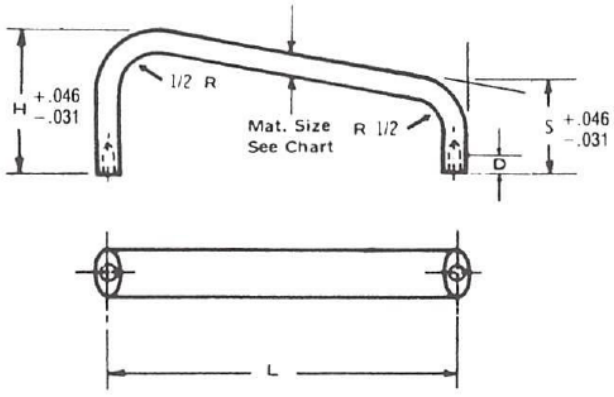

NOTE: DEPTH OF THREAD (D): Where "S" is 1" high and under, thread will be 3/8 deep, both legs.
"S" will be constant at 1/2" less than "H".

PART NO.	L ± 1/64	H ± 1/32
13570	3"	
13571	3-1/2	
13572	4"	
13573	4-9/16	
13574	5"	1-1/2
13575	6"	
13576	6-7/16	
13577	7"	
13578	8"	
13579	9"	
13580	10"	
13590	3"	
13591	3-1/2	
13592	4"	
13593	4-9/16	
13594	5"	1-5/8
13595	6"	
13596	6-7/16	
13597	7"	
13598	8"	
13599	9"	
13600	10"	

PART NO.	L ± 1/64	H ± 1/32
13605	3"	
13606	3-1/2	
13607	4"	
13608	4-9/16	
13609	5"	1-3/4
13610	6"	
13611	6-7/16	
13612	7"	
13613	8"	
13614	9"	
13615	10"	
13620	3"	
13621	3-1/2	
13622	4"	
13623	4-9/16	
13624	5"	2"
13625	6"	
13626	6-7/16	
13627	7"	
13628	8"	
13629	9"	
13630	10"	

PART NUMBER ORDERING SYSTEM

XXXXX - X - XXXX - XX

PART NO. | MATERIAL | THREAD | FINISH

THREAD CODE	
THREAD	CODE
10-24	1024
10-32	1032

MATERIAL	CODE
Aluminum	A
Brass	B

NOTE:
Metric size dimensions and threads available.
Please contact Sales Office.

5 Pasco Hill Road • Cromwell, CT 06416-1093
Phone: 860-828-0847 • Call Toll Free: 800-243-6032 • Fax: 860-828-0381
Web Address: http://www.amatom.com • E-Mail: sales@amatom.com

AMATOM®

5/16" ROUND HANDLES SLANTED TYPE INTERNAL THREADS

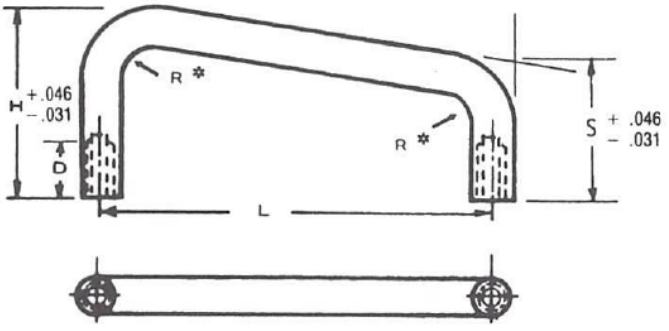

NOTE: DEPTH OF THREAD (D): Where "S" is 1" high and under, thread will be 3/8 deep, both legs. "S" will be constant at 1/2" less than "H". Radius is approx. same as O.D. of material.

PART NO.	L ± 1/64	H ± 1/32
13655	3"	1-1/2
13656	3-1/2	
13657	4"	
13658	4-9/16	
13659	5"	
13660	6"	
13661	6-7/16	
13662	7"	
13665	3"	1-5/8
13666	3-1/2	
13667	4"	
13668	4-9/16	
13669	5"	
13670	6"	
13671	6-7/16	
13672	7"	

PART NO.	L ± 1/64	H ± 1/32
13675	3"	1-3/4
13676	3-1/2	
13677	4"	
13678	4-9/16	
13679	5"	
13680	6"	
13681	6-7/16	
13682	7"	
13685	3"	2"
13686	3-1/2	
13687	4"	
13688	4-9/16	
13689	5"	
13690	6"	
13691	6-7/16	
13692	7"	

PART NUMBER ORDERING SYSTEM

XXXXX - X - XXXX - XX

PART NO. | MATERIAL | THREAD | FINISH

THREAD CODE	
THREAD	CODE
8-32	0832
10-32	1032

MATERIAL	CODE
Aluminum	A
Brass	B
Stainless Steel	SS

NOTE:
Metric size dimensions and threads available.
Please contact Sales Office.

5 Pasco Hill Road • Cromwell, CT 06416-1093
Phone: 860-828-0847 • Call Toll Free: 800-243-6032 • Fax: 860-828-0381
Web Address: http://www.amatom.com • E-Mail: sales@amatom.com

AMATOM®

3/8" ROUND HANDLES SLANTED TYPE INTERNAL THREADS

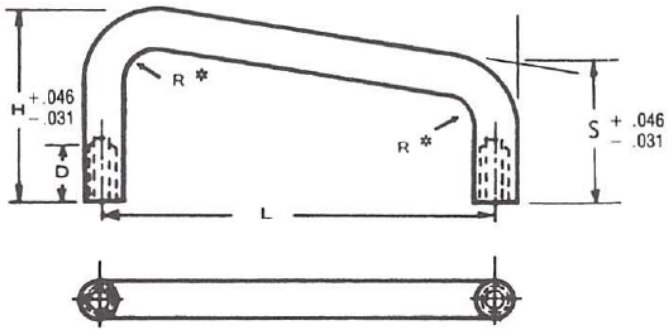

NOTE: DEPTH OF THREAD (D): Where "S" is 1" high and under, thread will be 3/8 deep, both legs. "S" will be constant at 1/2" less than "H". Radius is approx. same as O.D. of material.

PART NO.	L ± 1/64	H ± 1/32
13695	3"	
13696	3-1/2	
13697	4"	
13698	4-9/16	1-1/2
13699	5"	
13700	6"	
13701	6-7/16	
13702	7"	
13705	3"	
13706	3-1/2	
13707	4"	
13708	4-9/16	1-5/8
13709	5"	
13710	6"	
13711	6-7/16	
13712	7"	

PART NO.	L ± 1/64	H ± 1/32
13715	3"	
13716	3-1/2	
13717	4"	
13718	4-9/16	1-3/4
13719	5"	
13720	6"	
13721	6-7/16	
13722	7"	
13725	3"	
13726	3-1/2	
13727	4"	
13728	4-9/16	2"
13729	5"	
13730	6"	
13731	6-7/16	
13732	7"	

PART NUMBER ORDERING SYSTEM

XXXXX - X - XXXX - XX

PART NO. | MATERIAL | THREAD | FINISH

THREAD CODE	
THREAD	CODE
8-32	0832
10-32	1032

MATERIAL	CODE
Aluminum	A
Brass	B
Stainless Steel	SS

NOTE:
Metric size dimensions and threads available.
Please contact Sales Office.

5 Pasco Hill Road • Cromwell, CT 06416-1093
Phone: 860-828-0847 • Call Toll Free: 800-243-6032 • Fax: 860-828-0381
Web Address: http://www.amatom.com • E-Mail: sales@amatom.com

AMATOM®

17/32" X 9/32" BAR HANDLES EXTRUSION INTERNAL THREADS
ANODIZED ALUMINUM STRIPS

STYLE 1

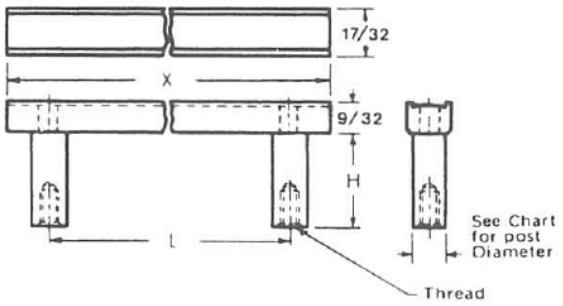

STYLE 2

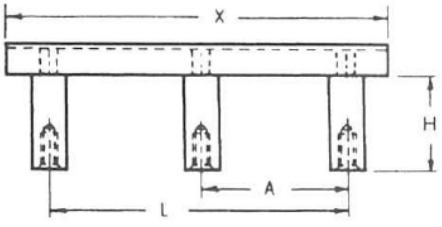

STYLE 3

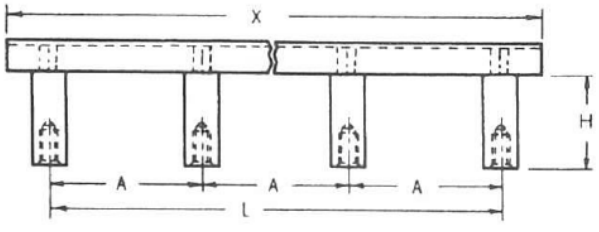

Standard color – Black.
Can be supplied in other colors on special order.

ALUMINUM 9/32 x 17/32 H 3/4						
		Leg Dia. →	5/16		3/8	
		Thread Size →	8-32	10-32	8-32	10-32
Style	A	L / X				
1		2" / 2-7/8	13745-A-0832	13745-A-1032	13770-A-0832	13770-A-1032
		2-1/4 / 3-1/8	13746-A-0832	13746-A-1032	13771-A-0832	13771-A-1032
		2-1/2 / 3-3/8	13747-A-0832	13747-A-1032	13772-A-0832	13772-A-1032
		3" / 3-7/8	13748-A-0832	13748-A-1032	13773-A-0832	13773-A-1032
		3-1/2 / 4-3/8	13749-A-0832	13749-A-1032	13774-A-0832	13774-A-1032
		4" / 4-7/8	13750-A-0832	13750-A-1032	13775-A-0832	13775-A-1032
		4-1/4 / 5-1/8	13751-A-0832	13751-A-1032	13776-A-0832	13776-A-1032
		4-1/2 / 5-3/8	13752-A-0832	13752-A-1032	13777-A-0832	13777-A-1032
		4-9/16 / 5-7/16	13753-A-0832	13753-A-1032	13778-A-0832	13778-A-1032
1		5" / 5-7/8	13754-A-0832	13754-A-1032	13779-A-0832	13779-A-1032
2	3.00	6" / 6-7/8	13755-A-0832	13755-A-1032	13780-A-0832	13780-A-1032
	3.50	7" / 7-7/8	13756-A-0832	13756-A-1032	13781-A-0832	13781-A-1032
	3.88	7-3/4 / 8-5/8	13757-A-0832	13757-A-1032	13782-A-0832	13782-A-1032
	4.00	8" / 8-7/8	13758-A-0832	13758-A-1032	13783-A-0832	13783-A-1032
	4.50	9" / 9-7/8	13759-A-0832	13759-A-1032	13784-A-0832	13784-A-1032
	4.75	9-1/2 / 10-3/8	13760-A-0832	13760-A-1032	13785-A-0832	13785-A-1032
	5.00	10" / 10-7/8	13761-A-0832	13761-A-1032	13786-A-0832	13786-A-1032
	5.50	11" / 11-7/8	13762-A-0832	13762-A-1032	13787-A-0832	13787-A-1032
2	5.63	11-1/4 / 12-1/8	13763-A-0832	13763-A-1032	13788-A-0832	13788-A-1032
3	4.00	12" / 12-7/8	13764-A-0832	13764-A-1032	13789-A-0832	13789-A-1032
	4.34	13" / 13-7/8	13765-A-0832	13765-A-1032	13790-A-0832	13790-A-1032
	4.67	14" / 14-7/8	13766-A-0832	13766-A-1032	13791-A-0832	13791-A-1032
3	4.92	14-3/4 / 15-5/8	13767-A-0832	13767-A-1032	13792-A-0832	13792-A-1032

Can be supplied in other colors on special order.

ALUMINUM 9/32 x 17/32 H 7/8						
		Leg Dia. →	5/16		3/8	
		Thread Size →	8-32	10-32	8-32	10-32
Style	A	L / X				
1		2" / 2-7/8	13795-A-0832	13795-A-1032	13820-A-0832	13820-A-1032
		2-1/4 / 3-1/8	13796-A-0832	13796-A-1032	13821-A-0832	13821-A-1032
		2-1/2 / 3-3/8	13797-A-0832	13797-A-1032	13822-A-0832	13822-A-1032
		3" / 3-7/8	13798-A-0832	13798-A-1032	13823-A-0832	13823-A-1032
		3-1/2 / 4-3/8	13799-A-0832	13799-A-1032	13824-A-0832	13824-A-1032
		4" / 4-7/8	13800-A-0832	13800-A-1032	13825-A-0832	13825-A-1032
		4-1/4 / 5-1/8	13801-A-0832	13801-A-1032	13826-A-0832	13826-A-1032
		4-1/2 / 5-3/8	13802-A-0832	13802-A-1032	13827-A-0832	13827-A-1032
		4-9/16 / 5-7/16	13803-A-0832	13803-A-1032	13828-A-0832	13828-A-1032
1		5" / 5-7/8	13804-A-0832	13804-A-1032	13829-A-0832	13829-A-1032
2	3.00	6" / 6-7/8	13805-A-0832	13805-A-1032	13830-A-0832	13830-A-1032
	3.50	7" / 7-7/8	13806-A-0832	13806-A-1032	13831-A-0832	13831-A-1032
	3.88	7-3/4 / 8-5/8	13807-A-0832	13807-A-1032	13832-A-0832	13832-A-1032
	4.00	8" / 8-7/8	13808-A-0832	13808-A-1032	13833-A-0832	13833-A-1032
	4.50	9" / 9-7/8	13809-A-0832	13809-A-1032	13834-A-0832	13834-A-1032
	4.75	9-1/2 / 10-3/8	13810-A-0832	13810-A-1032	13835-A-0832	13835-A-1032
	5.00	10" / 10-7/8	13811-A-0832	13811-A-1032	13836-A-0832	13836-A-1032
	5.50	11" / 11-7/8	13812-A-0832	13812-A-1032	13837-A-0832	13837-A-1032
2	5.63	11-1/4 / 12-1/8	13813-A-0832	13813-A-1032	13838-A-0832	13838-A-1032
3	4.00	12" / 12-7/8	13814-A-0832	13814-A-1032	13839-A-0832	13839-A-1032
	4.34	13" / 13-7/8	13815-A-0832	13815-A-1032	13840-A-0832	13840-A-1032
	4.67	14" / 14-7/8	13816-A-0832	13816-A-1032	13841-A-0832	13841-A-1032
3	4.92	14-3/4 / 15-5/8	13817-A-0832	13817-A-1032	13842-A-0832	13842-A-1032

5 Pasco Hill Road • Cromwell, CT 06416-1093
Phone: 860-828-0847 • Call Toll Free: 800-243-6032 • Fax: 860-828-0381
Web Address: http://www.amatom.com • E-Mail: sales@amatom.com

AMATOM®

17/32" X 9/32" BAR HANDLES EXTRUSION INTERNAL THREADS
ANODIZED ALUMINUM STRIPS

STYLE 1

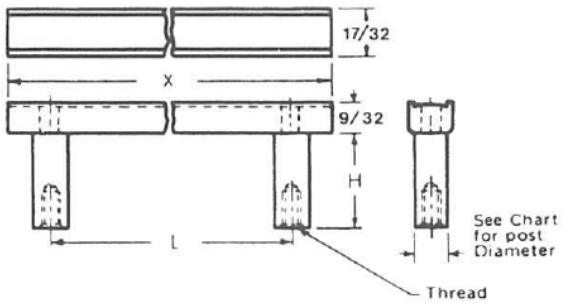

STYLE 2

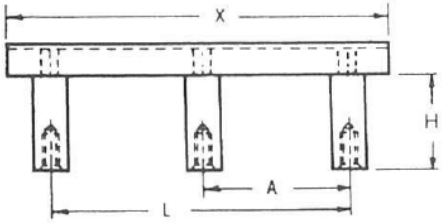

STYLE 3

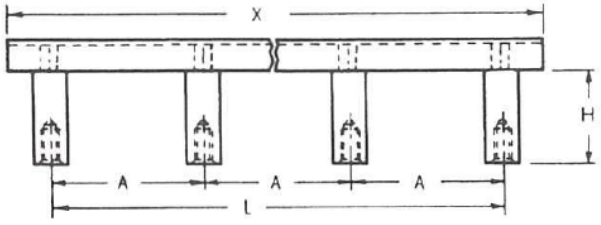

Standard color – Black.
Can be supplied in other colors on special order.

		ALUMINUM 9/32 x 17/32 H 1"					
		Leg Dia. →		5/16		3/8	
		Thread Size →		8-32	10-32	8-32	10-32
Style	↓ A	↓ L	↓ X				
1		2"	2-7/8	13845-A-0832	13845-A-1032	13870-A-0832	13870-A-1032
		2-1/4	3-1/8	13846-A-0832	13846-A-1032	13871-A-0832	13871-A-1032
		2-1/2	3-3/8	13847-A-0832	13847-A-1032	13872-A-0832	13872-A-1032
		3"	3-7/8	13848-A-0832	13848-A-1032	13873-A-0832	13873-A-1032
		3-1/2	4-3/8	13849-A-0832	13849-A-1032	13874-A-0832	13874-A-1032
		4"	4-7/8	13850-A-0832	13850-A-1032	13875-A-0832	13875-A-1032
		4-1/4	5-1/8	13851-A-0832	13851-A-1032	13876-A-0832	13876-A-1032
		4-1/2	5-3/8	13852-A-0832	13852-A-1032	13877-A-0832	13877-A-1032
		4-9/16	5-7/16	13853-A-0832	13853-A-1032	13878-A-0832	13878-A-1032
1		5"	5-7/8	13854-A-0832	13854-A-1032	13879-A-0832	13879-A-1032
2	3.00	6"	6-7/8	13855-A-0832	13855-A-1032	13880-A-0832	13880-A-1032
	3.50	7"	7-7/8	13856-A-0832	13856-A-1032	13881-A-0832	13881-A-1032
	3.88	7-3/4	8-5/8	13857-A-0832	13857-A-1032	13882-A-0832	13882-A-1032
	4.00	8"	8-7/8	13858-A-0832	13858-A-1032	13883-A-0832	13883-A-1032
	4.50	9"	9-7/8	13859-A-0832	13859-A-1032	13884-A-0832	13884-A-1032
	4.75	9-1/2	10-3/8	13860-A-0832	13860-A-1032	13885-A-0832	13885-A-1032
	5.00	10"	10-7/8	13861-A-0832	13861-A-1032	13886-A-0832	13886-A-1032
	5.50	11"	11-7/8	13862-A-0832	13862-A-1032	13887-A-0832	13887-A-1032
2	5.63	11-1/4	12-1/8	13863-A-0832	13863-A-1032	13888-A-0832	13888-A-1032
3	4.00	12"	12-7/8	13864-A-0832	13864-A-1032	13889-A-0832	13889-A-1032
	4.34	13"	13-7/8	13865-A-0832	13965-A-1032	13890-A-0832	13890-A-1032
	4.67	14"	14-7/8	13866-A-0832	13866-A-1032	13891-A-0832	13891-A-1032
3	4.92	14-3/4	15-5/8	13867-A-0832	13867-A-1032	13892-A-0832	13892-A-1032

		ALUMINUM 9/32 x 17/32 H 1-1/8					
		Leg Dia. →		5/16		3/8	
		Thread Size →		8-32	10-32	8-32	10-32
Style	↓ A	↓ L	↓ X				
1		2"	2-7/8	13895-A-0832	13895-A-1032	13920-A-0832	13920-A-1032
		2-1/4	3-1/8	13896-A-0832	13896-A-1032	13921-A-0832	13921-A-1032
		2-1/2	3-3/8	13897-A-0832	13897-A-1032	13922-A-0832	13922-A-1032
		3"	3-7/8	13898-A-0832	13898-A-1032	13923-A-0832	13923-A-1032
		3-1/2	4-3/8	13899-A-0832	13899-A-1032	13924-A-0832	13924-A-1032
		4"	4-7/8	13900-A-0832	13900-A-1032	13925-A-0832	13925-A-1032
		4-1/4	5-1/8	13901-A-0832	13901-A-1032	13926-A-0832	13926-A-1032
		4-1/2	5-3/8	13902-A-0832	13902-A-1032	13927-A-0832	13927-A-1032
		4-9/16	5-7/16	13903-A-0832	13903-A-1032	13928-A-0832	13928-A-1032
1		5"	5-7/8	13904-A-0832	13904-A-1032	13929-A-0832	13929-A-1032
2	3.00	6"	6-7/8	13905-A-0832	13905-A-1032	13930-A-0832	13930-A-1032
	3.50	7"	7-7/8	13906-A-0832	13906-A-1032	13931-A-0832	13931-A-1032
	3.88	7-3/4	8-5/8	13907-A-0832	13907-A-1032	13932-A-0832	13932-A-1032
	4.00	8"	8-7/8	13908-A-0832	13908-A-1032	13933-A-0832	13933-A-1032
	4.50	9"	9-7/8	13909-A-0832	13909-A-1032	13934-A-0832	13934-A-1032
	4.75	9-1/2	10-3/8	13910-A-0837	13910-A-1032	13935-A-0832	13935-A-1032
	5.00	10"	10-7/8	13911-A-0832	13911-A-1032	13936-A-0832	13936-A-1032
	5.50	11"	11-7/8	13912-A-0832	13912-A-1032	13937-A-0832	13937-A-1032
2	5.63	11-1/4	12-1/8	13913-A-0832	13913-A-1032	13938-A-0832	13938-A-1032
3	4.00	12"	12-7/8	13914-A-0832	13914-A-1032	13939-A-0832	13939-A-1032
	4.34	13"	13-7/8	13915-A-0832	13915-A-1032	13940-A-0832	13940-A-1032
	4.67	14"	14-7/8	13916-A-0832	13916-A-1032	13941-A-0832	13941-A-1032
3	4.92	14-3/4	15-5/8	13917-A-0832	13917-A-1032	13942-A-0832	13942-A-1032

5 Pasco Hill Road • Cromwell, CT 06416-1093
Phone: 860-828-0847 • Call Toll Free: 800-243-6032 • Fax: 860-828-0381
Web Address: http://www.amatom.com • E-Mail: sales@amatom.com

AMATOM®

17/32" X 9/32" BAR HANDLES EXTRUSION INTERNAL THREADS

ANODIZED ALUMINUM STRIPS

STYLE 1

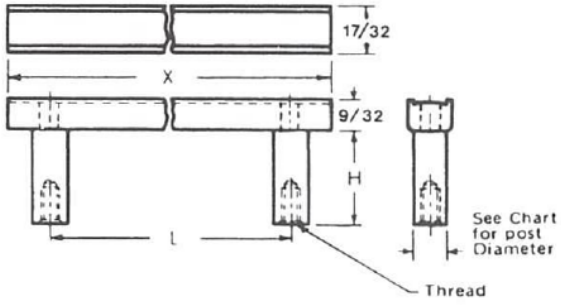

STYLE 2

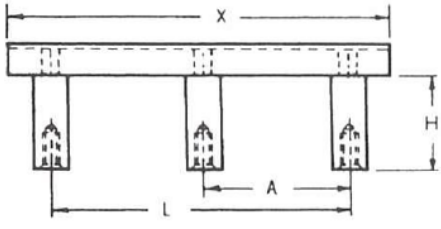

STYLE 3

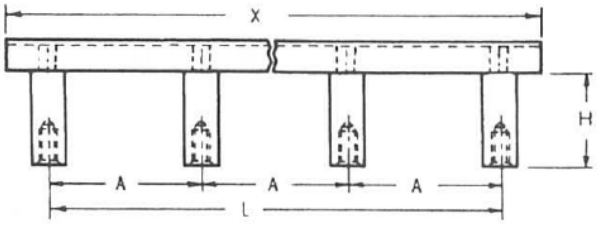

ALUMINUM 9/32 x 17/32 H 1-3/16						
		Leg Dia. →	5/16		3/8	
		Thread Size →	8-32	10-32	8-32	10-32
Style	↕ A	↕ L	↕ X				
1		2"	2-7/8	13945-A-0832	13945-A-1032	13970-A-0832	13970-A-1032
		2-1/4	3-1/8	13946-A-0832	13946-A-1032	13971-A-0832	13971-A-1032
		2-1/2	3-3/8	13947-A-0832	13947-A-1032	13972-A-0832	13972-A-1032
		3"	3-7/8	13948-A-0832	13948-A-1032	13973-A-0832	13973-A-1032
		3-1/2	4-3/8	13949-A-0832	13949-A-1032	13974-A-0832	13974-A-1032
		4"	4-7/8	13950-A-0832	13950-A-1032	13975-A-0832	13975-A-1032
		4-1/4	5-1/8	13951-A-0832	13951-A-1032	13976-A-0832	13976-A-1032
		4-1/2	5-3/8	13952-A-0832	13952-A-1032	13977-A-0832	13977-A-1032
		4-9/16	5-7/16	13953-A-0832	13953-A-1032	13978-A-0832	13978-A-1032
1		5"	5-7/8	13954-A-0832	13954-A-1032	13979-A-0832	13979-A-1032
2	3.00	6"	6-7/8	13955-A-0832	13955-A-1032	13980-A-0832	13980-A-1032
	3.50	7"	7-7/8	13956-A-0832	13956-A-1032	13981-A-0832	13981-A-1032
	3.88	7-3/4	8-5/8	13957-A-0832	13957-A-1032	13982-A-0832	13982-A-1032
	4.00	8"	8-7/8	13958-A-0832	13958-A-1032	13983-A-0832	13983-A-1032
	4.50	9"	9-7/8	13959-A-0832	13959-A-1032	13984-A-0832	13984-A-1032
	4.75	9-1/2	10-3/8	13960-A-0832	13960-A-1032	13985-A-0832	13985-A-1032
	5.00	10"	10-7/8	13961-A-0832	13961-A-1032	13986-A-0832	13986-A-1032
	5.50	11"	11-7/8	13962-A-0832	13962-A-1032	13987-A-0832	13987-A-1032
2	5.63	11-1/4	12-1/8	13963-A-0832	13963-A-1032	13988-A-0832	13988-A-1032
3	4.00	12"	12-7/8	13964-A-0832	13964-A-1032	13989-A-0832	13989-A-1032
	4.34	13"	13-7/8	13965-A-0832	13965-A-1032	13990-A-0832	13990-A-1032
	4.67	14"	14-7/8	13966-A-0832	13966-A-1032	13991-A-0832	13991-A-1032
3	4.92	14-3/4	15-5/8	13967-A-0832	13967-A-1032	13992-A-0832	13992-A-1032

ALUMINUM 9/32 x 17/32 H 1-7/16						
		Leg Dia. →	5/16		3/8	
		Thread Size →	8-32	10-32	8-32	10-32
		↕ L	↕ X				
		2"	2-7/8	13995-A-0832	13995-A-1032	14020-A-0832	14020-A-1032
		2-1/4	3-1/8	13996-A-0832	13996-A-1032	14021-A-0832	14021-A-1032
		2-1/2	3-3/8	13997-A-0832	13997-A-1032	14022-A-0832	14022-A-1032
		3"	3-7/8	13998-A-0832	13998-A-1032	14023-A-0832	14023-A-1032
		3-1/2	4-3/8	13999-A-0832	13999-A-1032	14024-A-0832	14024-A-1032
		4"	4-7/8	14000-A-0832	14000-A-1032	14025-A-0832	14025-A-1032
		4-1/4	5-1/8	14001-A-0832	14001-A-1032	14026-A-0832	14026-A-1032
		4-1/2	5-3/8	14002-A-0832	14002-A-1032	14027-A-0832	14027-A-1032
		4-9/16	5-7/16	14003-A-0832	14003-A-1032	14028-A-0832	14028-A-1032
		5"	5-7/8	14004-A-0832	14004-A-1032	14029-A-0832	14029-A-1032
		6"	6-7/8	14005-A-0832	14005-A-1032	14030-A-0832	14030-A-1032
		7"	7-7/8	14006-A-0832	14006-A-1032	14031-A-0832	14031-A-1032
		7-3/4	8-5/8	14007-A-0832	14007-A-1032	14032-A-0832	14032-A-1032
		8"	8-7/8	14008-A-0832	14008-A-1032	14033-A-0832	14033-A-1032
		9"	9-7/8	14009-A-0832	14009-A-1032	14034-A-0832	14034-A-1032
		9-1/2	10-3/8	14010-A-0832	14010-A-1032	14035-A-0832	14035-A-1032
		10"	10-7/8	14011-A-0832	14011-A-1032	14036-A-0832	14036-A-1032
		11"	11-7/8	14012-A-0832	14012-A-1032	14037-A-0832	14037-A-1032
		11-1/4	12-1/8	14013-A-0832	14013-A-1032	14038-A-0832	14038-A-1032
		12"	12-7/8	14014-A-0832	14014-A-1032	14039-A-0832	14039-A-1032
		13"	13-7/8	14015-A-0832	14015-A-1032	14040-A-0832	14040-A-1032
		14"	14-7/8	14016-A-0832	14016-A-1032	14041-A-0832	14041-A-1032
		14-3/4	15-5/8	14017-A-0832	14017-A-1032	14042-A-0832	14042-A-1032

ALUMINUM 9/32 x 17/32 H 1"							
			LEG DIAMETER →	3/8		7/16	
			THREAD SIZE →	6-32	8-32	6-32	8-32
Style	X	A	L				
1	1.56		.95	14070-A-0632	14070-A-0832	13735-A-0632	13735-A-0832
	3.31		2.59	14071-A-0632	14071-A-0832	13736-A-0632	13736-A-0832
	5.06		4.38	14072-A-0632	14072-A-0832	13737-A-0632	13737-A-0832
2	6.81	3.00	6.00	14073-A-0632	14073-A-0832	13738-A-0632	13738-A-0832
	8.56	3.75	7.50	14074-A-0632	14074-A-0832	13739-A-0632	13739-A-0832
	10.31	4.70	9.41	14075-A-0632	14075-A-0832	13740-A-0632	13740-A-0832
	12.06	5.58	11.15	14076-A-0632	14076-A-0832	13741-A-0632	13741-A-0832

Standard color – Black.
Can be supplied in other colors on special order.

5 Pasco Hill Road • Cromwell, CT 06416-1093
Phone: 860-828-0847 • Call Toll Free: 800-243-6032 • Fax: 860-828-0381
Web Address: http://www.amatom.com • E-Mail: sales@amatom.com

AMATOM®

5/16" ROUND HANDLES INTERNAL THREADS 90° FOLDING-FREE FALL

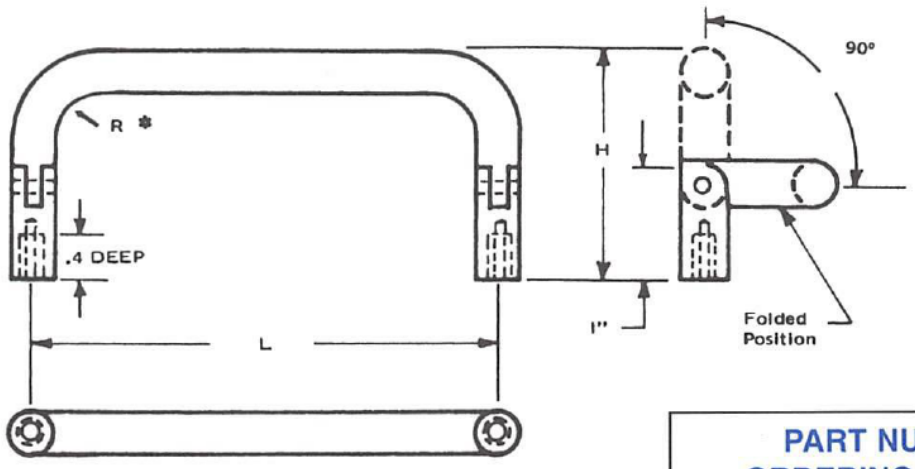

Radius is approx. same as O.D. of material.

PART NO.	L ± 1/64	H ± 1/32
14050	3"	
14051	3-1/2	
14052	4"	
14053	4-9/16	2"
14054	5"	
14055	6"	
14056	7"	

PART NUMBER ORDERING SYSTEM

XXXXX - X - XXXX - XX

PART NO. | MATERIAL | THREAD | FINISH

THREAD CODE	
THREAD	CODE
8-32	0832
10-32	1032

MATERIAL	CODE
Aluminum	A
Brass	B
Stainless Steel	SS
Steel	S

NOTE:
Metric size dimensions and threads available.
Please contact Sales Office.

5 Pasco Hill Road • Cromwell, CT 06416-1093
Phone: 860-828-0847 • Call Toll Free: 800-243-6032 • Fax: 860-828-0381
Web Address: http://www.amatom.com • E-Mail: sales@amatom.com

3/8" ROUND HANDLES INTERNAL THREADS 90° FOLDING-FREE FALL

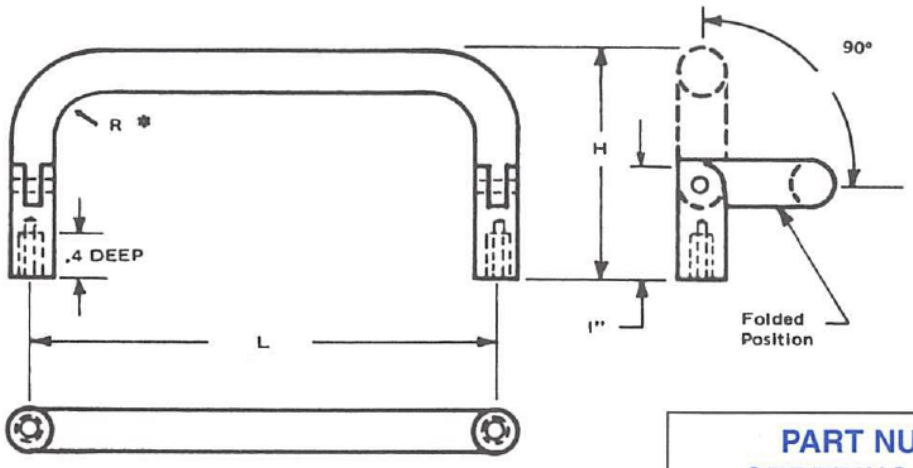

Radius is approx. same as O.D. of material.

PART NO.	L ± 1/64	H ± 1/32
14060	3"	
14061	3-1/2	
14062	4"	
14063	4-9/16	2"
14064	5"	
14065	6"	
14066	7"	

PART NUMBER ORDERING SYSTEM

XXXXX - X - XXXX - XX

PART NO. | MATERIAL | THREAD | FINISH

THREAD CODE	
THREAD	CODE
8-32	0832
10-32	1032

MATERIAL	CODE
Aluminum	A
Brass	B
Stainless Steel	SS
Steel	S

NOTE:
Metric size dimensions and threads available.
Please contact Sales Office.

5 Pasco Hill Road • Cromwell, CT 06416-1093
Phone: 860-828-0847 • Call Toll Free: 800-243-6032 • Fax: 860-828-0381
Web Address: http://www.amatom.com • E-Mail: sales@amatom.com

FERRULES

STYLE 1

- Tolerances: Decimals + or -.005 Fraction + or - 1/64.
- Special Shaped and Contours available on Special Order.
- Refer to page 102 for Finish Codes.

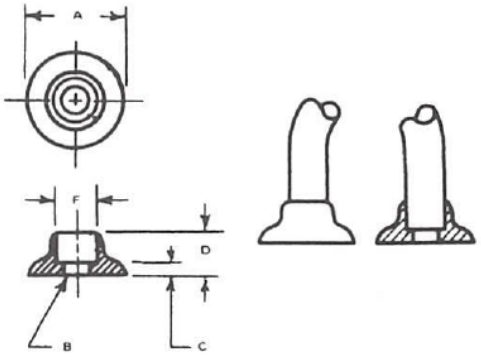

PART NO.	HANDLE DIA.	A	B	C	D	E	F	MATERIAL	FINISH
16000-A	5/16	3/4	.201	3/32	5/16	---	.320	Alum.	See Chart Page 102
16000-B		3/4	.201	3/32	5/16	---	.320	Brass	
16000-SS		3/4	.201	3/32	5/16	---	.320	SS	

STYLE 2

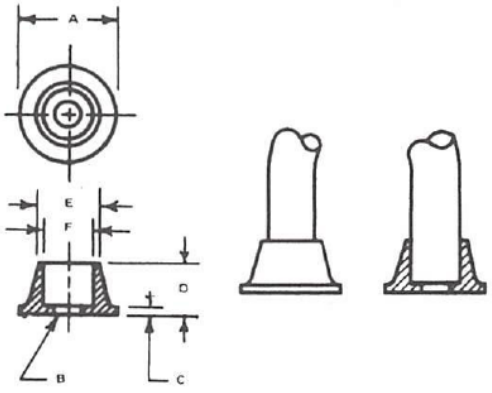

PART NO.	HANDLE DIA.	A	B	C	D	E	F	MATERIAL	FINISH
16005-A	1/4	5/8	.175	1/16	3/8	.318	.257	Alum.	See Chart Page 102
16005-B		5/8	.175	1/16	3/8	.318	.257	Brass	
16005-SS		5/8	.175	1/16	3/8	.318	.257	S. S.	
16008-A	5/16	3/4	.201	1/16	3/8	.392	.322	Alum.	
16008-B		3/4	.201	1/16	3/8	.392	.322	Brass	
16008-SS		3/4	.201	1/16	3/8	.392	.322	S. S.	
16010-A	3/8	3/4	.260	1/16	3/8	.453	.383	Alum.	
16010-B		3/4	.260	1/16	3/8	.453	.383	Brass	
16010-SS		3/4	.260	1/16	3/8	.453	.383	S. S.	

STYLE 3

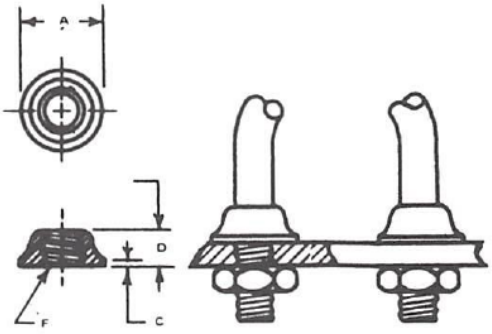

PART NO.	HANDLE DIA.	A	B	C	D	E	F	MATERIAL	FINISH
16012-A-3118	5/16	5/8	---	1/32	1/4	---	5/16-18	Alum.	See Chart Page 102
16012-B-3118		5/8	---	1/32	1/4	---	5/16-18	Brass	
16012-SS-3118		5/8	---	1/32	1/4	---	5/16-18	S. S.	
16012-A-3724	3/8	3/4	---	1/16	5/16	---	3/8-24	Alum.	
16012-B-3724		3/4	---	1/16	5/16	---	3/8-24	Brass	
16012-SS-3724		3/4	---	1/16	5/16	---	3/8-24	S. S.	

5 Pasco Hill Road • Cromwell, CT 06416-1093
Phone: 860-828-0847 • Call Toll Free: 800-243-6032 • Fax: 860-828-0381
Web Address: http://www.amatom.com • E-Mail: sales@amatom.com

FERRULES

STYLE 4

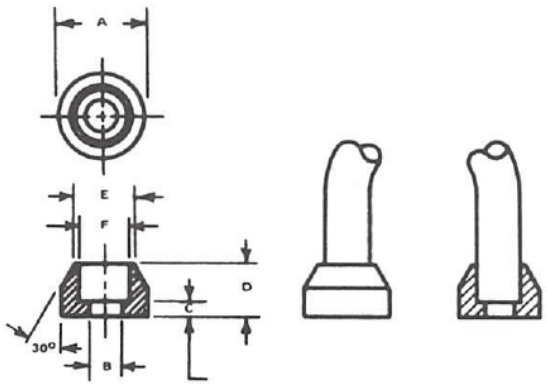

TO BE USED WITH ANY STYLE ROUND HANDLES WITH INTERNAL THREAD.

PART NO.	HANDLE DIA.	A	B	C	D	E	F	MATL	Finsh
16015-A	1/8	1/4	.097	.046	1/8	.200	.136	ALUM.	See Chart Page 102
16015-B		1/4	.097	.046	1/8	.200	.136	BRASS	
16015-SS		1/4	.097	.046	1/8	.200	.136	S.S.	
16016-A	5/32	1/4	.125	.046	1/8	.200	.161	ALUM.	
16016-B		1/4	.125	.046	1/8	.200	.161	BRASS	
16016-SS		1/4	.125	.046	1/8	.200	.161	S.S.	
16017-A	3/16	5/16	.148	1/16	1/8	.265	.203	ALUM.	
16017-B		5/16	.148	1/16	1/8	.265	.203	BRASS	
16017-SS		5/16	.148	1/16	1/8	.265	.203	S.S.	
16018-A	1/4	3/8	.175	1/16	1/8	.310	.260	ALUM.	
16018-B		3/8	.175	1/16	1/8	.310	.260	BRASS	
16018-SS		3/8	.175	1/16	1/8	.310	.260	S.S.	
16019-A	1/4	3/8	.175	1/16	3/16	.320	.260	ALUM.	
16019-B		3/8	.175	1/16	3/16	.320	.260	BRASS	
16019-SS		3/8	.175	1/16	3/16	.320	.260	S.S.	
16020-A	1/4	7/16	.175	1/16	3/16	.320	.260	ALUM.	
16020-B		7/16	.175	1/16	3/16	.320	.260	BRASS	
16020-SS6		7/16	.175	1/16	3/16	.320	.260	S.S.	
16021-A	1/4	1/2	.175	1/16	1/4	.343	.260	ALUM.	
16021-B		1/2	.175	1/16	1/4	.343	.260	BRASS	
16021-SS		1/2	.175	1/16	1/4	.343	.260	S.S.	
16022-A	5/16	15/32	.201	1/16	1/4	.406	.320	ALUM.	
16022-B		15/32	.201	1/16	1/4	.406	.320	BRASS	
16022-SS		15/32	.201	1/16	1/4	.406	.320	S.S.	
16023-A	5/16	9/16	.201	1/16	1/4	.406	.320	ALUM.	
16023-B		9/16	.201	1/16	1/4	.406	.320	BRASS	
16023-SS		9/16	.201	1/16	1/4	.406	.320	S.S.	
16024-A	3/8	5/8	.260	3/32	3/8	.469	.385	ALUM.	
16024-B		5/8	.260	3/32	3/8	.469	.385	BRASS	
16024-SS		5/8	.260	3/32	3/8	.469	.385	S.S.	
16025-A	1/2	3/4	.322	3/32	3/8	.607	.515	ALUM.	
16025-B		3/4	.322	3/32	3/8	.607	.515	BRASS	
16025-SS		3/4	.322	3/32	3/8	.607	.515	S.S.	

STYLE 5

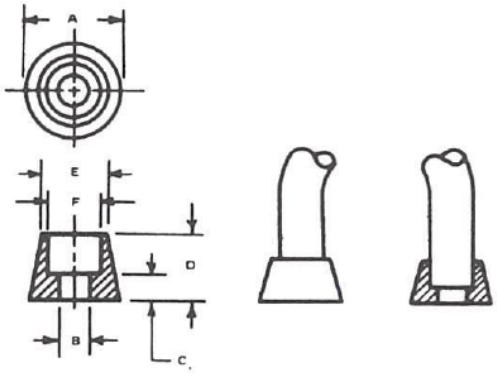

PART NO.	HANDLE DIA.	A	B	C	D	E	F	MATERIAL	FINISH
16028-A	5/16	9/16	.201	3/32	5/16	7/16	.323	Alum.	See Chart Page 102
16028-B		9/16	.201	3/32	5/16	7/16	.323	Brass	
16028-SS		9/16	.201	3/32	5/16	7/16	.323	S.S.	
16029-A	3/8	5/8	.260	1/8	7/16	7/16	.390	Alum.	
16029-B		5/8	.260	1/8	7/16	7/16	.390	Brass	
16029-SS		5/8	.260	1/8	7/16	7/16	.390	S.S.	
16030-A	1/2	3/4	.322	3/16	9/16	19/32	.510	Alum.	
16030-B		3/4	.322	3/16	9/16	19/32	.510	Brass	
16030-SS		3/4	.322	3/16	9/16	19/32	.510	S.S.	

5 Pasco Hill Road • Cromwell, CT 06416-1093
Phone: 860-828-0847 • Call Toll Free: 800-243-6032 • Fax: 860-828-0381
Web Address: http://www.amatom.com • E-Mail: sales@amatom.com

AMATOM®

Part Number Code and Specifications

PLEASE READ THIS CAREFULLY

EXPLANATION OF AMATOM PART NUMBERS

15121	–	BG	–	187	–	1B
Style & Size of Handle		Color of Grip where applicable		Standard Mounting Hole size		Code for Finish (i.e. 1B-Clear Anodize)

NOTES:

(a) Styles #1 and 2 have grip as integral part of handle, in this case, grip will be same color (finish) as handle. See Handle Finish Code below.

(b) Styles #3, 4 and 5 handles can be supplied with No Finish, Clear or Black Anodize with a Black Grip, Gray Grip or No Grip. See charts page 4.

(c) Mounting hole of .187 is standard size for #8 screw. Handle can be ordered with hole for #10 screw on a special order basis by changing .187 in part number to .194.

HANDLE FINISH CODE
0 No Finish
1B Clear Anodize
2 Black Anodize

GRIP COLOR CODE (where applicable)
BG Black
GG Gray
NG No Grip

HANDLE MATERIAL SPECIFICATION
Aluminum Extruded per 6005-T5

GRIP MATERIAL SPECIFICATION
PVC (Plastic Extrusion) 75 ± 5 Durometer Shore A with additive for Ultra-Violet Protection — Matte finish.

MACHINING TOLERANCES
2 place dec. xx ±.01
Fractions ±1/64
Angles ±1°

All specifications subject to change without notice.

5 Pasco Hill Road • Cromwell, CT 06416-1093
Phone: 860-828-0847 • Call Toll Free: 800-243-6032 • Fax: 860-828-0381
Web Address: http://www.amatom.com • E-Mail: sales@amatom.com

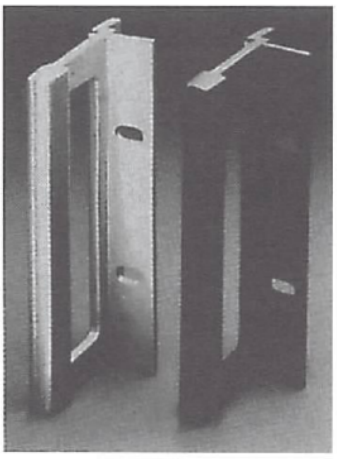

Style 1 - Rack Mount Handle

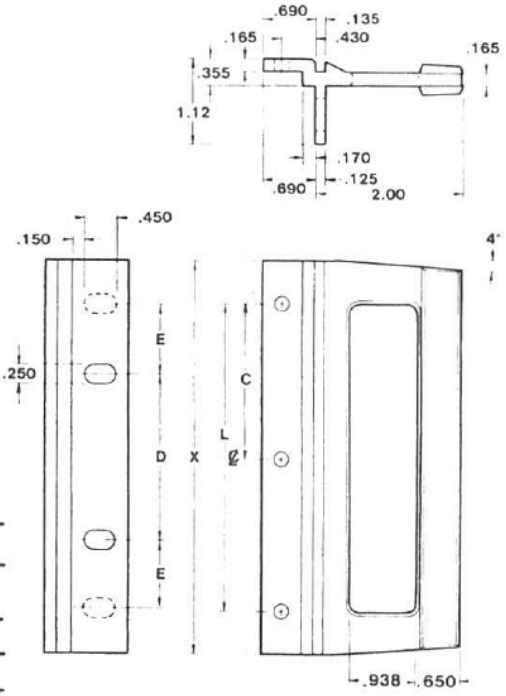

Amatom Part Number	Style	X-dim. Inches	Case Mounting Holes			Rack Mounting Holes		
			No. Holes	L-dim. Inches	C-dim. Inches	No. Holes	D-dim. Inches	E-dim. Inches
15101-187	1	3.46	2	2.52	—	2	3.00	—
15102-187	1	5.21	3	4.12	2.06	2	2.25	—
15103-187	1	5.96	3	4.61	2.30	2	4.00	—
15104-187	1	6.96	3	5.16	2.58	2	4.00	—
15105-187	1	7.96	3	5.82	2.91	4	2.25	1.75

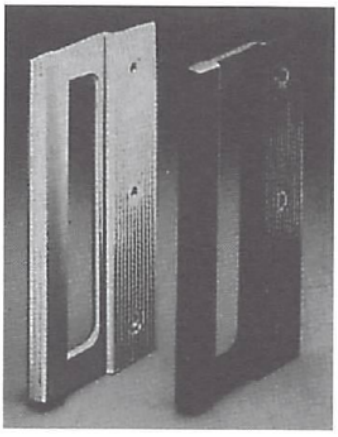

Style 2 - Extruded Grip Handle

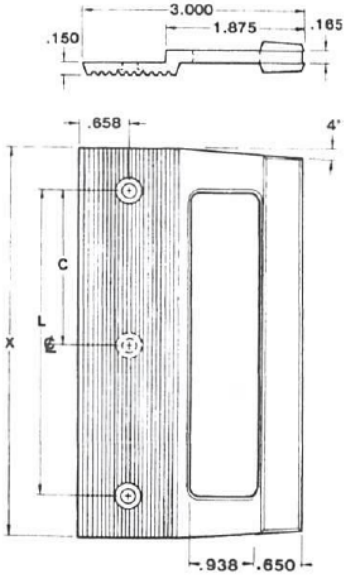

Amatom Part Number	Style	No. Case Mtg. Holes	X-dim. Inches	L-dim. Inches	C-dim. Inches
15111-187	2	2	3.46	2.52	—
15112-187	2	3	5.21	4.12	2.06
15113-187	2	3	5.96	4.61	2.30
15114-187	2	3	6.96	5.16	2.58
15115-187	2	3	7.96	5.82	2.91

5 Pasco Hill Road • Cromwell, CT 06416-1093
Phone: 860-828-0847 • Call Toll Free: 800-243-6032 • Fax: 860-828-0381
Web Address: http://www.amatom.com • E-Mail: sales@amatom.com

AMATOM®

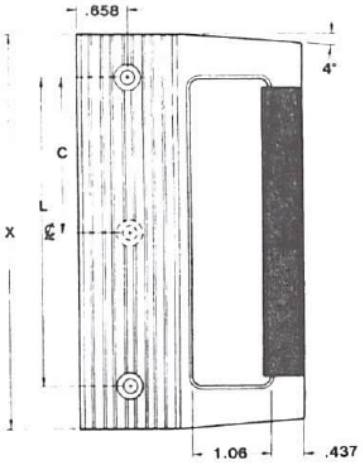

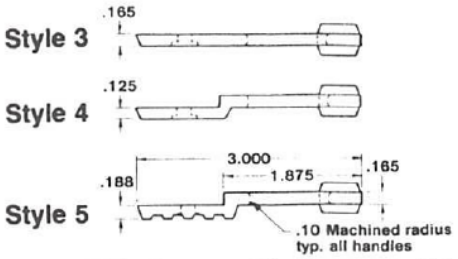

PVC GRIP (see specifications page 50)
BG BLACK
GG GRAY
NG NO GRIP

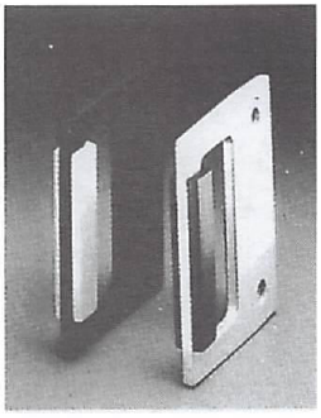

Style 3

Style 3 - Straight Handle

Style No.	No. Case Mtg. Holes	X-dim. Inches	L-dim. Inches	C-dim. Inches	Amatom Part No. Black Grip	Amatom Part No. Gray Grip	Amatom Part No. No Grip
3	2	3.46	2.52	—	15121-BG-187	15121-GG-187	15121-NG-187
3	3	5.21	4.12	2.06	15122-BG-187	15122-GG-187	15122-NG-187
3	3	5.96	4.61	2.30	15123-BG-187	15123-GG-187	15123-NG-187
3	3	6.96	5.16	2.58	15124-BG-187	15124-GG-187	15124-NG-187
3	3	7.96	5.82	2.91	15125-BG-187	15125-GG-187	15125-NG-187

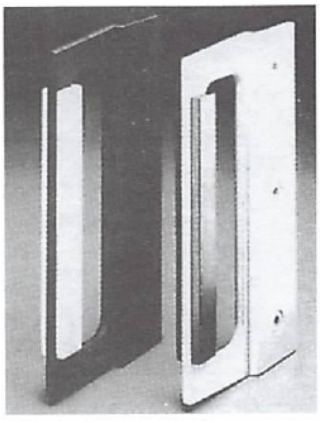

Style 4

Style 4 - Plain Handle

Style No.	No. Case Mtg. Holes	X-dim. Inches	L-dim. Inches	C-dim. Inches	Amatom Part No. Black Grip	Amatom Part No. Gray Grip	Amatom Part No. No Grip
4	2	3.46	2.52	—	15131-BG-187	15131-GG-187	15131-NG-187
4	3	5.21	4.12	2.06	15132-BG-187	15132-GG-187	15132-NG-187
4	3	5.96	4.61	2.30	15133-BG-187	15133-GG-187	15133-NG-187
4	3	6.96	5.16	2.58	15134-BG-187	15134-GG-187	15134-NG-187
4	3	7.96	5.82	2.91	15135-BG-187	15135-GG-187	15135-NG-187

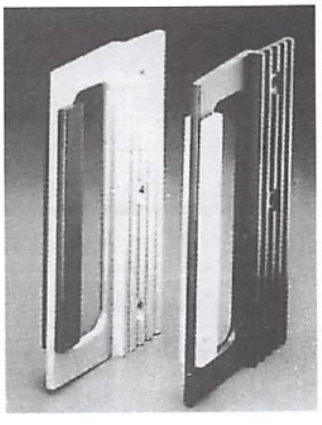

Style 5

Style 5 - Ribbed Handle

Style No.	No. Case Mtg. Holes	X-dim. Inches	L-dim. Inches	C-dim. Inches	Amatom Part No. Black Grip	Amatom Part No. Gray Grip	Amatom Part No. No Grip
5	2	3.46	2.52	—	15141-BG-187	15141-GG-187	15141-NG-187
5	3	5.21	4.12	2.06	15142-BG-187	15142-GG-187	15142-NG-187
5	3	5.96	4.61	2.30	15143-BG-187	15143-GG-187	15143-NG-187
5	3	6.96	5.16	2.58	15144-BG-187	15144-GG-187	15144-NG-187
5	3	7.96	5.82	2.91	15145-BG-187	15145-GG-187	15145-NG-187

5 Pasco Hill Road • Cromwell, CT 06416-1093
Phone: 860-828-0847 • Call Toll Free: 800-243-6032 • Fax: 860-828-0381
Web Address: http://www.amatom.com • E-Mail: sales@amatom.com

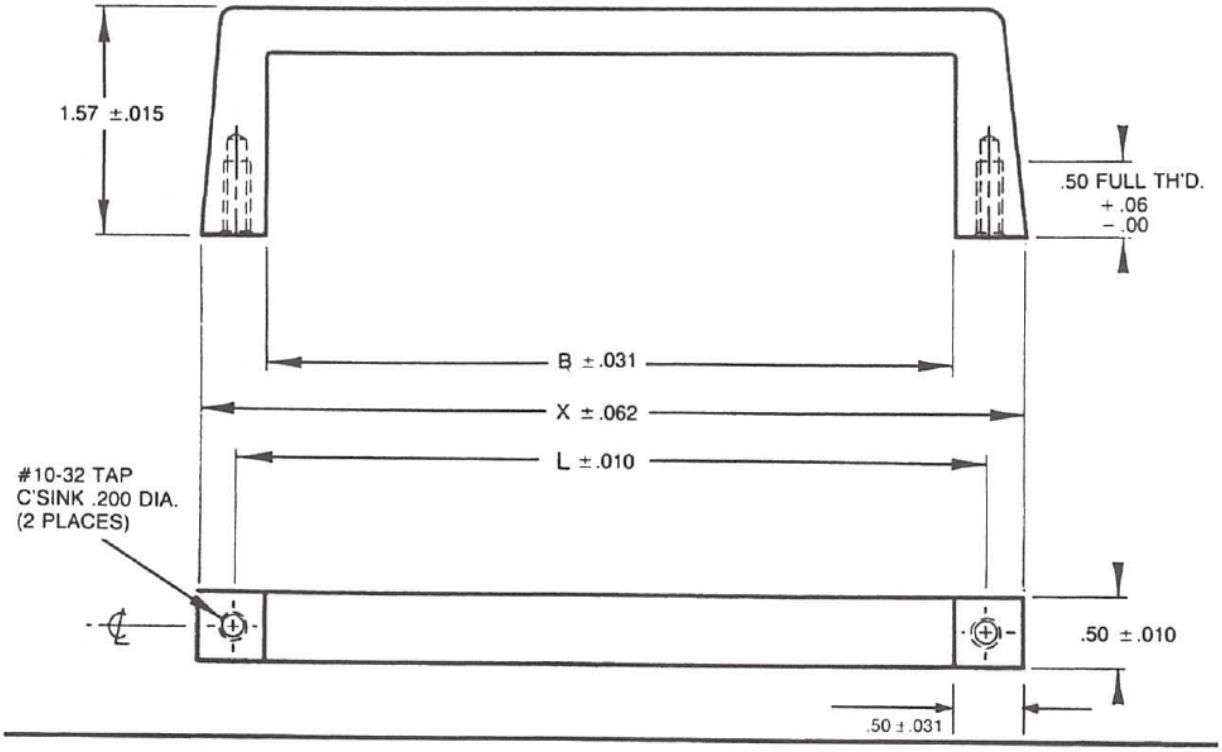

Amatom Pt. No.	For Panel Size Inch	mm	Panel	Unit	L Inch	mm	X Inch	mm	B Inch	mm
80300-A-1032	3.46	88.1	B	2	2¼	57.15	2¾	69.85	1¾	44.45
80303-A-1032	5.21	132.5	C	3	3½	88.90	4	101.60	3	76.20
80306-A-1032	6.96	177.0	D	4	5¼	133.35	5¾	146.05	4¾	120.65
80309-A-1032	8.71	221.0	E	5	7	177.80	7½	190.50	6½	165.10

Panel Width for Rack Mount

Panel	Unit	A inches	mm	L	Rack Mtg. Holes D
B	2	3.46	88.1	2¼	3
C	3	5.21	132.5	3½	2¼
D	4	6.96	177.0	5¼	4
E	5	8.71	221.0	7	5¾

Panel

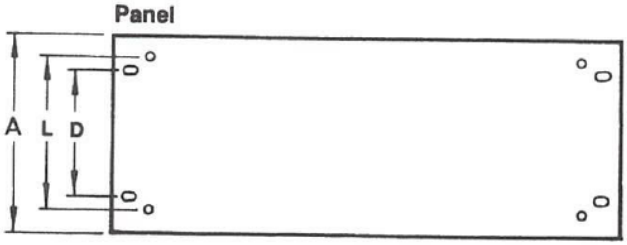

Material Specs for Handles

High-Tech handles are machined from 6005-T5 or 6063-T5 extruded aluminum.

Standard thread size is 10-32. Other sizes available on Special Order as is. If metric thread is desired, specify 5x 0.8.

Finishes Available on Handles

Finish Code	Finish	
1B	Clear Anodize	Standard
2	Black Anodize	Optional
2E	Brushed-Clear Anodize	"
2F	Brushed-Black Anodize	"
36	Electrostatic applied black epoxy	"

5 Pasco Hill Road • Cromwell, CT 06416-1093
Phone: 860-828-0847 • Call Toll Free: 800-243-6032 • Fax: 860-828-0381
Web Address: http://www.amatom.com • E-Mail: sales@amatom.com

AMATOM®

NEW High-Tech HANDLES by AMATOM

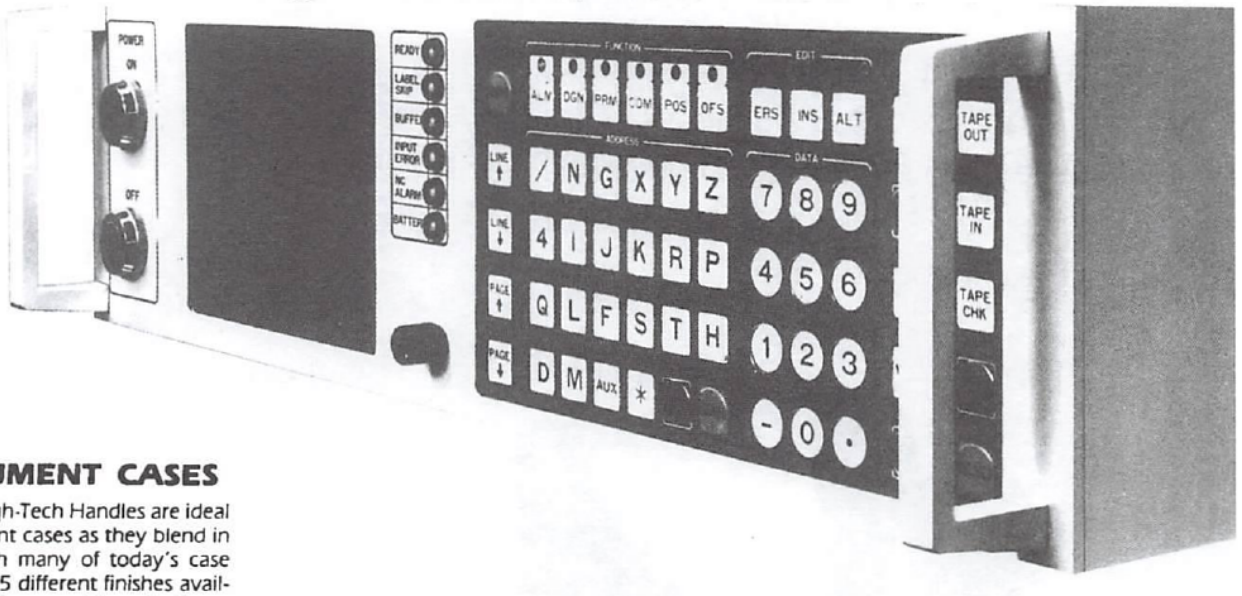

INSTRUMENT CASES

Amatom High-Tech Handles are ideal for instrument cases as they blend in so well with many of today's case styles. With 5 different finishes available, there is no problem finding a good match for your case or front panel.

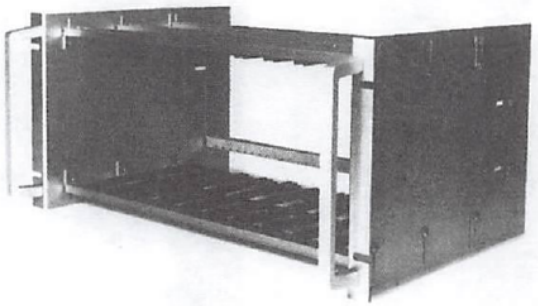

RACK MOUNT CASES

Add style to your rack mounted instruments by using Amatom's new High-Tech Handles. Choose one of 5 finishes available to complement the front panel with a new modern look. Handles are sized for standard panel widths and are compatible with standard rack hole spacing.

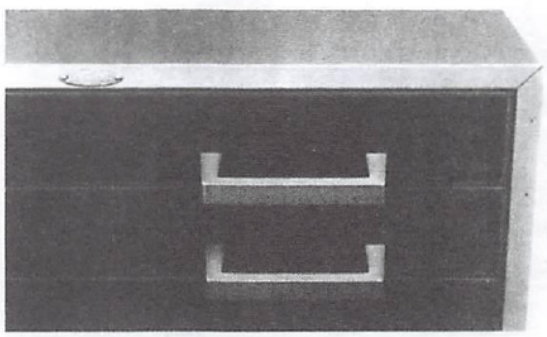

DRAWERS

Used as horizontal drawer pulls, Amatom's new High-Tech Handles feel comfortable and provide the contemporary styling for today's equipment.

5 Pasco Hill Road • Cromwell, CT 06416-1093
Phone: 860-828-0847 • Call Toll Free: 800-243-6032 • Fax: 860-828-0381
Web Address: http://www.amatom.com • E-Mail: sales@amatom.com

AMATOM®

POSITIVE LOCKING FOLDING HANDLES

AMATOM now offers three different models of Locking Handles.

The two new models, the Compact and the Low Profile, retain all the same features found in the original Standard size handles.

- Easy one hand operation.
- Lightweight extruded aluminum.
- 300 series and heat treated 400 series stainless.
- Available from stock in two heights and several lengths.
- Black anodize finish.

Standard Compact Low Profile

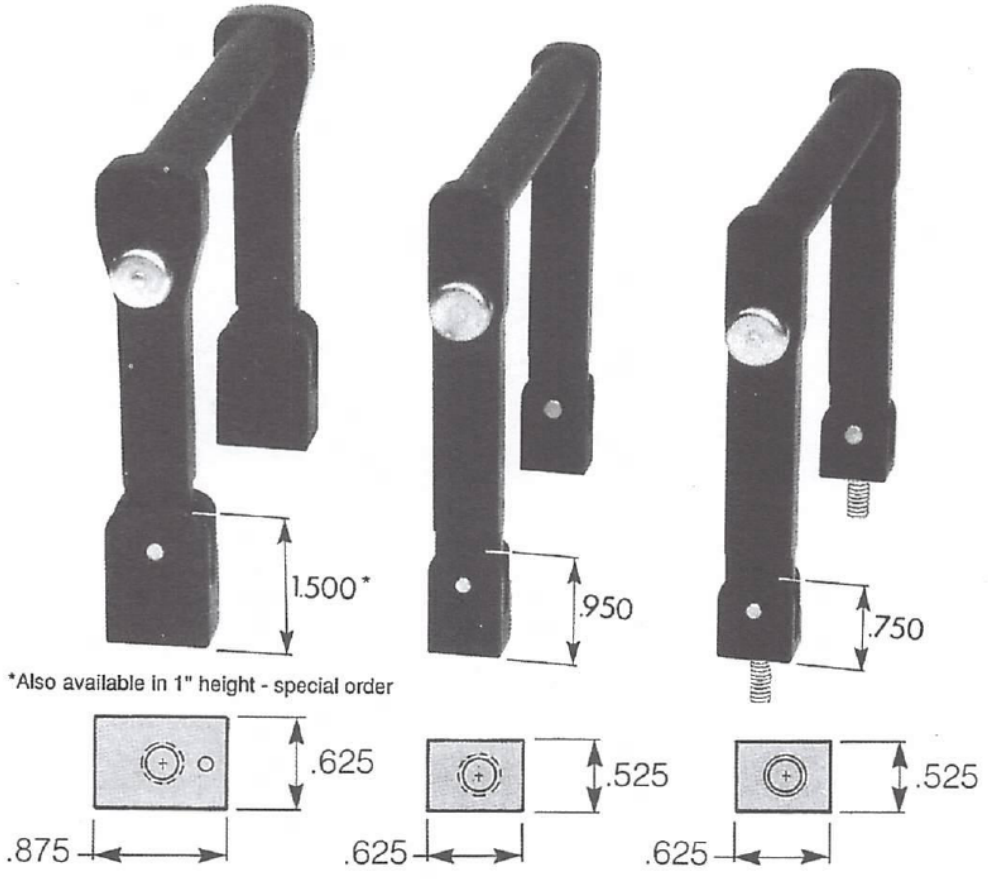

5 Pasco Hill Road • Cromwell, CT 06416-1093
Phone: 860-828-0847 • Call Toll Free: 800-243-6032 • Fax: 860-828-0381
Web Address: http://www.amatom.com • E-Mail: sales@amatom.com

AMATOM®

Part No.	E (+.010)	F (+.020)	G (REF.)	L (REF.)
80820	2.68	3.00	3.53	3.32
80821	3.68	4.00	4.53	4.32
80822	4.18	4.50	5.03	4.82
80823	4.68	5.00	5.53	5.32
80820-2	2.68	3.00	3.53	3.32
80821-2	3.68	4.00	4.53	4.32
80822-2	4.18	4.50	5.03	4.82
80823-2	4.68	5.00	5.53	5.32
For part numbers 80820 thru 80823, **A**=3.068 **B**=3.965 **H**=2.400 All (±.020)				
For part numbers 80820-2 thru 80823-2, **A**=1.478 **B**=2.375 **H**=0.875 All (±.020)				

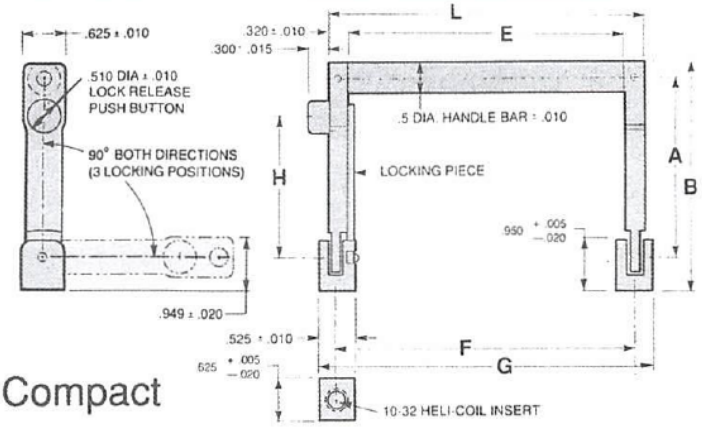

Compact

Part No.	E (+.010)	F (+.020)	G (REF.)	L (REF.)
80826	2.68	3.00	3.53	3.32
80827	3.68	4.00	4.53	4.32
80828	4.18	4.50	5.03	4.82
80829	4.68	5.00	5.53	5.32
80830	5.68	6.00	6.53	6.32
80826-2	2.68	3.00	3.53	3.32
80827-2	3.68	4.00	4.53	4.32
80828-2	4.18	4.50	5.03	4.82
80829-2	4.68	5.00	5.53	5.32
80830-2	5.68	6.00	6.53	6.32
For part numbers 80826 thru 80829, **A**=3.068 **B**=3.766 **H**=2.400 All (±.020)				
For part numbers 80826-2 thru 80829-2, **A**=1.478 **B**=2.176 **H**=0.875 All (±.020)				

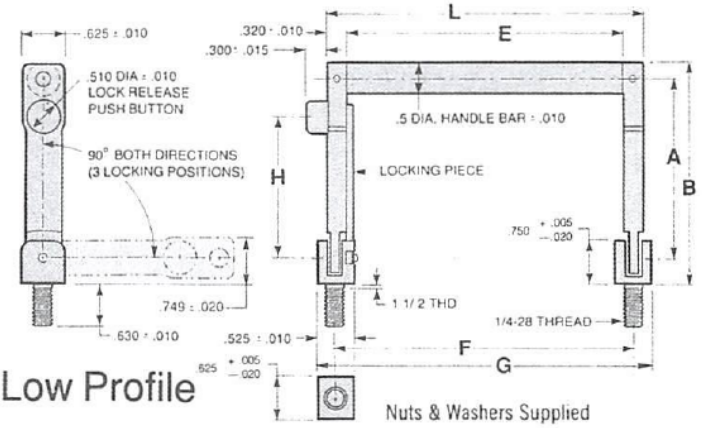

Low Profile

Part No.	E (+.010)	F (+.020)	G (REF.)	L (REF)
80428	2.57	3.00	3.63	3.45
80430	3.57	4.00	4.63	4.45
80432	4.07	4.50	5.13	4.95
80434	4.57	5.00	5.63	5.45
80436	5.57	6.00	6.63	6.45
80442	7.57	8.00	8.63	8.45
80453	2.57	3.00	3.63	3.45
80455	3.57	4.00	4.63	4.45
80457	4.07	4.50	5.13	4.95
80459	4.57	5.00	5.63	5.45
80461	5.57	6.00	6.63	6.45
80465	7.57	8.00	8.63	8.45
For part numbers 80428 thru 80442, **A**=1.400 **B**=2.785 **H**=0.875 All (±.020)				
For part numbers 80453 thur 80465, **A**=2.990 **B**=4.375 **H**=2.400 All (±.020)				

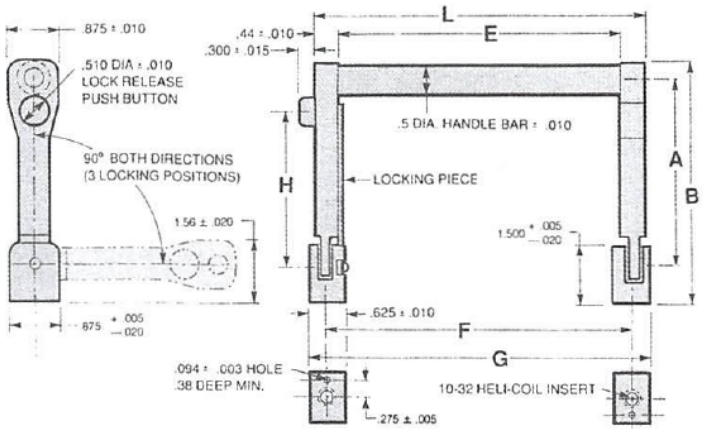

Standard

Materials:
Ferrules, side pieces and cross bar - 6061T6 aluminum.
Push button, spring - 300 series stainless steel.
Locking piece - 410 stainless steel.
Pivot and retaining pins 203EZ.
Internally threaded mounting holes are fitted with 10-32 locking Heli-Coil inserts.

Standard Finish:
Aluminum - Black anodized MIL-A-8625D.
Stainless steel - passivated MIL-F-14072-E300.

Notes:
Load at extended position: up to 160 Pounds.
Average force to release lock: 6 pounds.
All specifications listed above apply to all three versions.

5 Pasco Hill Road • Cromwell, CT 06416-1093
Phone: 860-828-0847 • Call Toll Free: 800-243-6032 • Fax: 860-828-0381
Web Address: http://www.amatom.com • E-Mail: sales@amatom.com

HANDLES 90° SPRING LOADED

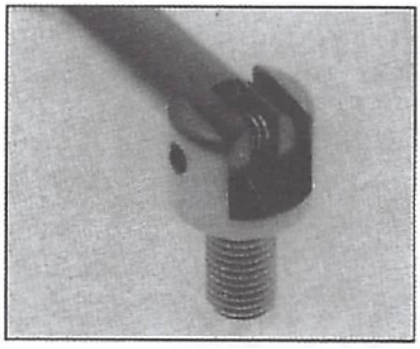

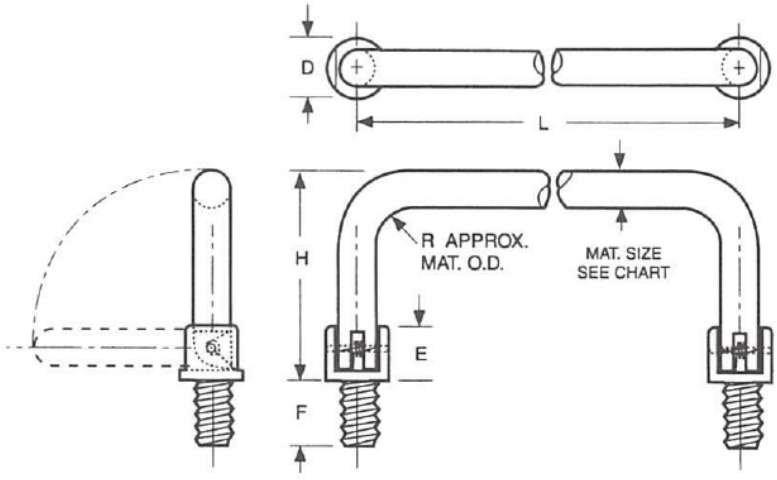

MATERIAL SIZE	D	E	F
5/16	5/8	1/2	5/8
3/8			

LENGTH ℄ TO ℄	MATERIAL SIZE 5/16" OD		
	H 1.5 5/8 OD FERRULE THREAD 5/16-24		
MATERIAL	ALUMINUM (A)	BRASS (B)	CRESS (SS)
3	81100-A-3124	81100-B-3124	81100-SS-3124
4	81101-A-3124	81101-B-3124	81101-SS-3124
4-1/2	81102-A-3124	81102-B-3124	81102-SS-3124
5	81103-A-3124	81103-B-3124	81103-SS-3124
6	81104-A-3124	81104-B-3124	81104-SS-3124

LENGTH ℄ TO ℄	MATERIAL SIZE 3/8" OD		
	H 1.5 5/8 OD FERRULE THREAD 5/16-24		
MATERIAL	ALUMINUM (A)	BRASS (B)	CRESS (SS)
3	81115-A-3124	81115-B-3124	81115-SS-3124
4	81116-A-3124	81116-B-3124	81116-SS-3124
4-1/2	81117-A-3124	81117-B-3124	81117-SS-3124
5	81118-A-3124	81118-B-3124	81118-SS-3124
6	81119-A-3124	81119-B-3124	81119-SS-3124

LENGTH ℄ TO ℄	MATERIAL SIZE 5/16" OD		
	H 1.85 5/8 OD FERRULE THREAD 5/16-24		
MATERIAL	ALUMINUM (A)	BRASS (B)	CRESS (SS)
3	81105-A-3124	81105-B-3124	81105-SS-3124
4	81106-A-3124	81106-B-3124	81106-SS-3124
4-1/2	81107-A-3124	81107-B-3124	81107-SS-3124
5	81108-A-3124	81108-B-3124	81108-SS-3124
6	81109-A-3124	81109-B-3124	81109-SS-3124

LENGTH ℄ TO ℄	MATERIAL SIZE 3/8" OD		
	H 1.85 5/8 OD FERRULE THREAD 5/16-24		
MATERIAL	ALUMINUM (A)	BRASS (B)	CRESS (SS)
3	81120-A-3124	81120-B-3124	81120-SS-3124
4	81121-A-3124	81121-B-3124	81121-SS-3124
4-1/2	81122-A-3124	81122-B-3124	81122-SS-3124
5	81123-A-3124	81123-B-3124	81123-SS-3124
6	81124-A-3124	81124-B-3124	81124-SS-3124

LENGTH ℄ TO ℄	MATERIAL SIZE 5/16" OD		
	H 2.375 5/8 OD FERRULE THREAD 5/16-24		
MATERIAL	ALUMINUM (A)	BRASS (B)	CRESS (SS)
3	81110-A-3124	81110-B-3124	81110-SS-3124
4	81111-A-3124	81111-B-3124	81111-SS-3124
4-1/2	81112-A-3124	81112-B-3124	81112-SS-3124
5	81113-A-3124	81113-B-3124	81113-SS-3124
6	81114-A-3124	81114-B-3124	81114-SS-3124

LENGTH ℄ TO ℄	MATERIAL SIZE 3/8" OD		
	H 2.375 5/8 OD FERRULE THREAD 5/16-24		
MATERIAL	ALUMINUM (A)	BRASS (B)	CRESS (SS)
3	81125-A-3124	81125-B-3124	81125-SS-3124
4	81126-A-3124	81126-B-3124	81126-SS-3124
4-1/2	81127-A-3124	81127-B-3124	81127-SS-3124
5	81128-A-3124	81128-B-3124	81128-SS-3124
6	81129-A-3124	81129-B-3124	81129-SS-3124

5 Pasco Hill Road • Cromwell, CT 06416-1093
Phone: 860-828-0847 • Call Toll Free: 800-243-6032 • Fax: 860-828-0381
Web Address: http://www.amatom.com • E-Mail: sales@amatom.com

AMATOM®

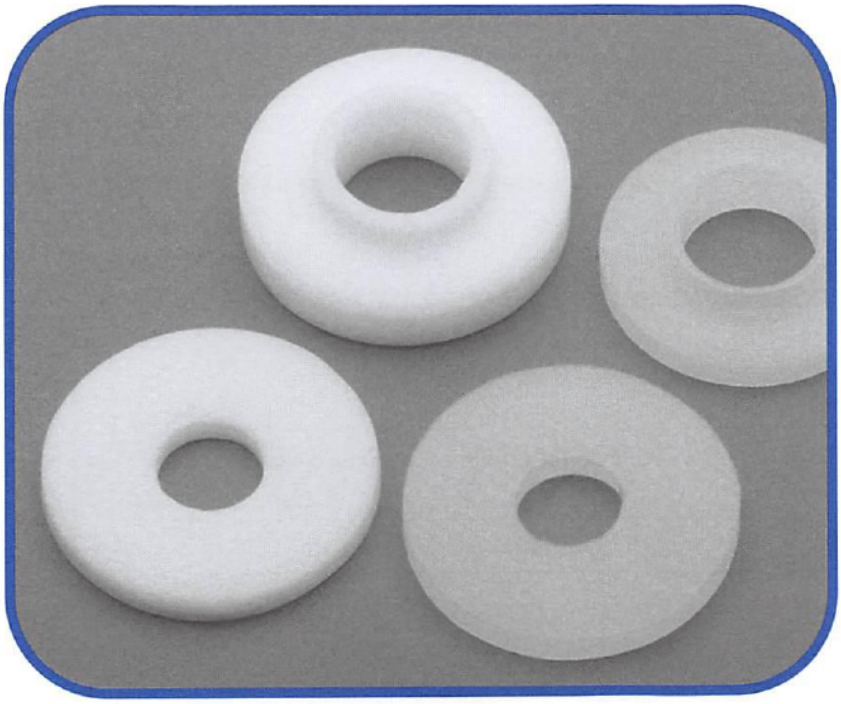

INSULATING WASHERS
FLAT AND SHOULDER

ELECTRONIC HARDWARE
REFERENCE MANUAL

From anywhere in the USA Call Cromwell, CT **1-800-243-6032**

AMATOM ELECTRONIC HARDWARE
5 Pasco Hill Road
Cromwell, CT 06416-1093
860-828-0847
Fax: 860-828-0381
E-Mail: sales@amatom.com
Web Address: http://www.amatom.com

Insulating Washers Index

This Reference Manual has been compiled to make available to Engineers and Buyers in the Electronic Industry the most comprehensive listing of INSULATING WASHERS, both Flat and Shoulder.

FLAT WASHERS

This section of INSULATING WASHERS, FLAT includes the following listed categories of sizes and materials:

NOTE 1 Available from stock in Nylon, Teflon, and Phenolic.

FLAT WASHERS – to accommodate screw sizes – 00 to 9/16

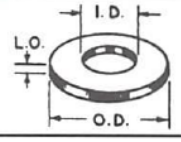

INSIDE DIAMETER I.D.	OUTSIDE DIAMETER O.D.	THICKNESS L.O.
.055″ to .569″	.125″ to 1.250″	.016″ to .135″

INDEX...FLAT WASHERS

SCREW SIZE	00	0	1	2	3	4	5	6	8	10	12	1/4	5/16	3/8	7/16	1/2	9/16
PAGE NO.	183	183	183	183	183-184	184	185	185	186	186	186	187	187	187-188	188	188	188

SHOULDER WASHERS

This section of INSULATING WASHERS, SHOULDER includes the following listed categories of sizes and materials:

NOTE 1 Available from stock in Nylon, Teflon, and Linen base Phenolic.

SHOULDER WASHERS – to accommodate screw sizes – 00 to 9/16

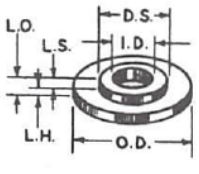

INSIDE DIAMETER I.D.	DIAMETER OF SHANK D.S.	THICKNESS OF SHANK L.S.	OUTSIDE DIAMETER O.D.	THICKNESS OF HEAD L.H.	OVERALL THICKNESS L.O.
.046″ to .765″	.090″ to .875″	.004″ to .125″	.140″ to 1.500″	.010″ to .127″	.019″ to .187″

INDEX...SHOULDER WASHERS

SCREW SIZE	00	0	2	3	4	5	6	8	10	12	1/4	5/16	3/8	7/16	1/2	9/16
PAGE NO.	189	189	190	191-192	193-196	197-202	203-210	211-214	215-220	221-224	225-228	229-230	231-233	234-235	235	236

5 Pasco Hill Road • Cromwell, CT 06416-1093
Phone: 860-828-0847 • Call Toll Free: 800-243-6032 • Fax: 860-828-0381
Web Address: http://www.amatom.com • E-Mail: sales@amatom.com

FINISHES
CHART A

30	Moisture and Fungus Resistant	Mil V-173

Or To Your Specification

CLEARANCE HOLE CODE
(See Notes below.)
CHART C

THREAD SIZE	THREAD MAJOR DIAMETER	CLEARANCE HOLE CODE	THREAD SIZE	THREAD MAJOR DIAMETER	CLEARANCE HOLE CODE
0-80	.060	063	10-24	.190	194
1-64	.073	078	10-32	.190	194
1-72	.073	078	12-24	.216	219
2-56	.086	089	1/4-20	.250	253
2-64	.086	089	1/4-28	.250	253
3-48	.099	101	5/16-18	.3125	317
3-56	.099	101	5/16-24	.3125	317
4-40	.112	116	3/8-16	.375	385
4-48	.112	116	3/8-24	.375	385
5-40	.125	126	3/8-32	.375	385
5-44	.125	126	7/16-14	.4375	443
6-32	.138	140	7/16-20	.4375	443
6-40	.138	140	1/2-13	.500	515
8-32	.164	171	1/2-20	.500	515
8-36	.164	171	9/16-18	.562	569

a. Clearance Code is the size of hole in a washer, needed to clear the major diameter and not have a sloppy fit.
b. Tolerance on Clearance Hole Code, which designates I.D. of washer, is +.010, –.000.

MATERIALS
CHART B

MATERIAL	Code Letter	MATERIAL SPECIFICATIONS
Delrin	D	L-P-392
Nylon[2]	N	L-P-410[3]
Phenolic	PH-F	Mil-P-15035 (Fabric Base)
Phenolic[4]	PH	L-P-513 (Paper Base)[5]
Teflon	T	Mil-P-14078

NOTES:
1. All Fibre parts supplied by AMATOM are checked carefully at the time of shipment for correct dimensions. Fibre should be stored at normal room temperature with a relative humidity of approximately 50%. Incorrect storage may result in warping, swelling or shrinking – due to absorption or loss of moisture.
   Maximum Situation – Fibre only:
   Diameter of Shank (D.S.) is approx. 40% Outside Diameter (O.D.)
   Minimum I.D. to D.S. .031 wall.
   Minimum L.H. .046 for max. L.S. of .031
2. Nylon Minimum .015 Wall I.D. to D.S.
3. Formerly Mil-P-17091-B (Grade 101).
4. Phenolic Minimum .031 Wall I.D. to D.S.
5. Formerly Mil-P-3115

PLEASE NOTE:
Shoulder heights (L.S.) cannot exceed 75% of O.D. when O.D. is not machined.
Overall height (L.O.) cannot exceed 75% of O.D. when O.D. is machined.

PROPERTIES
CHART D

PROPERTY	NYLON 101	TEFLON	PHENOLIC		DELRIN ACETAL
			XXXP	LE	
Tensile Strength psi	11,200 - 16,500	2,700 - 3,100	13,500	10,000 - 14,000	10.000
Compressive Strength psi	4,000 - 11,000	700 - 1,200	36,000	37,000	18.000
Heat Resistance (continuous °F)	250	550	250 - 275	225 - 250	250
Dielectric Constant (60 cycles)	10	2.1			3.7
Dielectric Strength 1/8 Thickness (v/mil)	300 - 400	400	325	225	500
Arc Resistance (Sec)	140	200	10	10	129
Water Absorption 24 hrs (%)	1.5	.00	.5	1.8	.12
Rockwell Hardness	107 - 119	R-58	M110	M113	R120
Flammability (in/min) .125 in.	SELF - EXT.	NON-FLAM.			1.1
Specific Gravity	1.13 - 1.14	2.13	1.35	1.33	1.42

Information listed above was obtained from charts submitted by various manufacturers. We believe this information to be accurate, but since test methods vary, their validity cannot be verified. This chart is compiled for information purposes only.

5 Pasco Hill Road • Cromwell, CT 06416-1093
Phone: 860-828-0847 • Call Toll Free: 800-243-6032 • Fax: 860-828-0381
Web Address: http://www.amatom.com • E-Mail: sales@amatom.com

2316-F116-30

PLEASE READ THIS CAREFULLY...
FLAT WASHERS – EXPLANATION OF AMATOM PART NUMBERS

2316 – F 116 – 30

- **2316** — This number indicates the outside diameter (O.D.) and thickness (L.O.) (Assigned number.)
- **F** — This letter indicates the material. See Code on Page 181.
- **116** — This number indicates the inside dia. (I.D.) See Code on Page 181.
- **30** — This number indicates the finish. See Code on Page 181.

PLEASE READ THIS CAREFULLY...
SHOULDER WASHERS –
EXPLANATION OF AMATOM PART NUMBERS

2711-21650-F140-30

2711 – 216 50 – F 140 – 30

- **2711** — This number indicates the outside diameter (O.D.) and length of head (L.H.) (Assigned number.)
- **216** — This number indicates the diameter of shank (D.S.)
- **50** — This number indicates length of shank (L.S.)
- **F** — This letter indicates material. See Code on Page 181.
- **140** — This number indicates inside diameter (I.D.)
- **30** — This number indicates finish. See Code on Page 181.

5 Pasco Hill Road • Cromwell, CT 06416-1093
Phone: 860-828-0847 • Call Toll Free: 800-243-6032 • Fax: 860-828-0381
Web Address: http://www.amatom.com • E-Mail: sales@amatom.com

FLAT INSULATING WASHERS

SCREW CLEARANCE NOS. 00, 0, 1, 2, 3

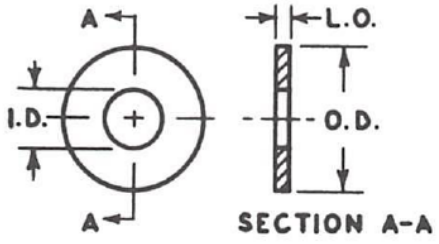

TOLERANCES	
I.D.	+.010, −.000
O.D.	+.015, −.005
L.O.	±.003 for .016 - .032 Thick.
	±.005 for .040 - .047 Thick
	±.006 for .062 Thick.
	±.009 for .093 Thick.
	±.010 for .094 Thick. & over

SCREW SIZE	I. D.	L. O.	O. D.	MATERIAL	NYLON (N)	TEFLON (T)	PHENOLIC†
00 (.047)	.055	.016	.125		2199-N055	2199-T055	2199-PH055
0 (.060)	.063	.016	.187		2201-N063	2201-T063	2201-PH063
		.016	.218		2202-N063	2202-T063	2202-PH063
		.016	.250		2203-N063	2203-T063	2203-PH063
		.016	.281		2204-N063	2204-T063	2204-PH063
		.031	.187		2252-N063	2252-T063	2252-PH063
		.031	.218		2253-N063	2253-T063	2253-PH063
		.031	.250		2254-N063	2254-T063	2254-PH063
		.031	.281		2255-N063	2255-T063	2255-PH063
		.062	.187		2314-N063	2314-T063	2314-PH063
		.062	.218		2315-N063	2315-T063	2315-PH063
		.062	.250		2316-N063	2316-T063	2316-PH063
		.062	.281		2317-N063	2317-T063	2317-PH063
		.093	.250		2338-N063	2338-T063	2338-PH063
		.093	.281		2339-N063	2339-T063	2339-PH063
	.067	.016	.125		2199-N067	2199-T067	2199-PH067
1 (.073)	.078	.031	.187		2252-N078	2252-T078	2252-PH078

Continued

SCREW SIZE	I. D.	L. O.	O. D.	MATERIAL	NYLON (N)	TEFLON (T)	PHENOLIC†
2 (.086)	.089	.016	.187		2201-N089	2201-T089	2201-PH089
		.016	.218		2202-N089	2202-T089	2202-PH089
	.093	.016	.250		2203-N093	2203-T093	2203-PH093
	.089	.016	.281		2204-N089	2204-T089	2204-PH089
		.016	.312		2205-N089	2205-T089	2205-PH089
		.031	.187		2252-N089	2252-T089	2252-PH089
	.093	.031	.218		2253-N093	2253-T093	2253-PH093
	.089	.031	.250		2254-N089	2254-T089	2254-PH089
		.031	.281		2255-N089	2255-T089	2255-PH089
		.031	.312		2256-N089	2256-T089	2256-PH089
		.031	.343		2257-N089	2257-T089	2257-PH089
		.031	.375		2258-N089	2258-T089	2258-PH089
		.031	.437		2259-N089	2259-T089	2259-PH089
		.031	.500		2260-N089	2260-T089	2260-PH089
		.031	.562		2261-N089	2261-T089	2261-PH089
		.031	.625		2264-N089	2264-T089	2264-PH089
		.062	.218		2315-N089	2315-T089	2315-PH089
		.062	.250		2316-N089	2316-T089	2316-PH089
		.062	.281		2317-N089	2317-T089	2317-PH089
	.093	.062	.312		2318-N093	2318-T093	2318-PH093
	.089	.062	.343		2319-N089	2319-T089	2319-PH089
		.062	.375		2320-N089	2320-T089	2320-PH089
3 (.099)	.104	.016	.180		2200-N104	2200-T104	2200-PH104
		.016	.187		2201-N104	2201-T104	2201-PH104
		.016	.218		2202-N104	2202-T104	2202-PH104
		.016	.250		2203-N104	2203-T104	2203-PH104
		.016	.281		2204-N104	2204-T104	2204-PH104
		.016	.312		2205-N104	2205-T104	2205-PH104

†PHENOLIC (PH)

Continued next page

5 Pasco Hill Road • Cromwell, CT 06416-1093
Phone: 860-828-0847 • Call Toll Free: 800-243-6032 • Fax: 860-828-0381
Web Address: http://www.amatom.com • E-Mail: sales@amatom.com

FLAT INSULATING WASHERS

SCREW CLEARANCE NOS. 3, 4

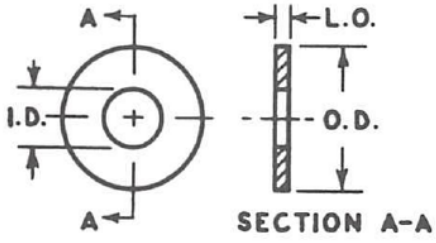

TOLERANCES	
I.D.	+.010, −.000
O.D.	+.015, −.005
L.O.	±.003 for .016 - .032 Thick.
	±.005 for .040 - .047 Thick
	±.006 for .062 Thick.
	±.009 for .093 Thick.
	±.010 for .094 Thick. & over

Continued from previous page

SCREW SIZE	I. D.	L. O.	O. D.	MATERIAL	NYLON (N)	TEFLON (T)	PHENOLIC†
3 (.099)	.104	.025	.180		2234-N104	2234-T104	2234-PH104
	↓	.031	.180		2251-N104	2251-T104	2251-PH104
	↓	.031	.187		2252-N104	2252-T104	2252-PH104
	↓	.031	.218		2253-N104	2253-T104	2253-PH104
	.109	.031	.250		2254-N109	2254-T109	2254-PH109
	.104	.031	.281		2255-N104	2255-T104	2255-PH104
	↓	.031	.312		2256-N104	2256-T104	2256-PH104
	↓	.031	.343		2257-N104	2257-T104	2257-PH104
	↓	.031	.375		2258-N104	2258-T104	2258-PH104
	↓	.031	.437		2259-N104	2259-T104	2259-PH104
	↓	.031	.500		2260-N104	2260-T104	2260-PH104
	↓	.031	.562		2261-N104	2261-T104	2261-PH104
	↓	.031	.625		2264-N104	2264-T104	2264-PH104
	↓	.062	.250		2316-N104	2316-T104	2316-PH104
	↓	.062	.281		2317-N104	2317-T104	2317-PH104
	↓	.062	.312		2318-N104	2318-T104	2318-PH104
	↓	.062	.343		2319-N104	2319-T104	2319-PH104
	↓	.062	.375		2320-N104	2320-T104	2320-PH104
	↓	.062	.437		2321-N104	2321-T104	2321-PH104
	↓	.062	.500		2322-N104	2322-T104	2322-PH104
	↓	.062	.562		2323-N104	2323-T104	2323-PH104
	↓	.062	.625		2326-N104	2326-T104	2326-PH104

Continued

SCREW SIZE	I. D.	L. O.	O. D.	MATERIAL	NYLON (N)	TEFLON (T)	PHENOLIC†
4 (.112)	.116	.016	.187		2201-N116	2201-T116	2201-PH116
	↓	.016	.218		2202-N116	2202-T116	2202-PH116
	.120	.016	.250		2203-N120	2203-T120	2203-PH120
	.116	.016	.281		2204-N116	2204-T116	2204-PH116
		.016	.312		2205-N116	2205-T116	2205-PH116
	.120	.020	.281		2221-N120	2221-T120	2221-PH120
	.116	.031	.187		2252-N116	2252-T116	2252-PH116
	↓	.031	.218		2253-N116	2253-T116	2253-PH116
	↓	.031	.250		2254-N116	2254-T116	2254-PH116
	.120	.031	.281		2255-N120	2255-T120	2255-PH120
	.116	.031	.312		2256-N116	2256-T116	2256-PH116
	↓	.031	.343		2257-N116	2257-T116	2257-PH116
	↓	.031	.375		2258-N116	2258-T116	2258-PH116
	↓	.031	.437		2259-N116	2259-T116	2259-PH116
	↓	.031	.500		2260-N116	2260-T116	2260-PH116
	↓	.031	.562		2261-N116	2261-T116	2261-PH116
	↓	.031	.625		2264-N116	2264-T116	2264-PH116
	.120	.040	.281		2275-N120	2275-T120	2275-PH120
	.116	.047	.281		2288-N116	2288-T116	2288-PH116
	↓	.062	.250		2316-N116	2316-T116	2316-PH116
	.120	.062	.281		2317-N120	2317-T120	2317-PH120
	.116	.062	.312		2318-N116	2318-T116	2318-PH116
	↓	.062	.343		2319-N116	2319-T116	2319-PH116
	.125	.062	.375		2320-N125	2320-T125	2320-PH125
	.116	.062	.437		2321-N116	2321-T116	2321-PH116
	↓	.062	.500		2322-N116	2322-T116	2322-PH116
	↓	.062	.562		2323-N116	2323-T116	2323-PH116
	↓	.062	.625		2326-N116	2326-T116	2326-PH116

†PHENOLIC (PH)

5 Pasco Hill Road • Cromwell, CT 06416-1093
Phone: 860-828-0847 • Call Toll Free: 800-243-6032 • Fax: 860-828-0381
Web Address: http://www.amatom.com • E-Mail: sales@amatom.com

FLAT INSULATING WASHERS

SCREW CLEARANCE NOS. 5, 6

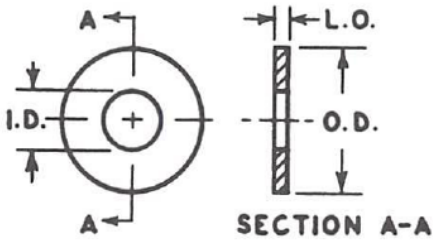

TOLERANCES	
I.D.	+.010, −.000
O.D.	+.015, −.005
L.O.	±.003 for .016 - .032 Thick.
	±.005 for .040 - .047 Thick
	±.006 for .062 Thick.
	±.009 for .093 Thick.
	±.010 for .094 Thick. & over

SCREW SIZE	I. D.	L. O.	O. D.	MATERIAL NYLON (N)	TEFLON (T)	PHENOLIC†
5 (.125)	.129	.016	.187	2201-N129	2201-T129	2201-PH129
		.016	.218	2202-N129	2202-T129	2202-PH129
		.016	.250	2203-N129	2203-T129	2203-PH129
		.016	.281	2204-N129	2204-T129	2204-PH129
		.016	.312	2205-N129	2205-T129	2205-PH129
		.031	.187	2252-N129	2252-T129	2252-PH129
		.031	.218	2253-N129	2253-T129	2253-PH129
		.031	.250	2254-N129	2254-T129	2254-PH129
		.031	.281	2255-N129	2255-T129	2255-PH129
		.031	.312	2256-N129	2256-T129	2256-PH129
		.031	.343	2257-N129	2257-T129	2257-PH129
		.031	.375	2258-N129	2258-T129	2258-PH129
		.031	.437	2259-N129	2259-T129	2259-PH129
		.031	.500	2260-N129	2260-T129	2260-PH129
		.031	.562	2261-N129	2261-T129	2261-PH129
		.031	.625	2264-N129	2264-T129	2264-PH129
		.040	.218	2273-N129	2273-T129	2273-PH129
		.047	.312	2289-N129	2289-T129	2289-PH129
		.062	.250	2316-N129	2316-T129	2316-PH129
		.062	.281	2317-N129	2317-T129	2317-PH129
		.062	.312	2318-N129	2318-T129	2318-PH129
		.062	.343	2319-N129	2319-T129	2319-PH129
		.062	.375	2320-N129	2320-T129	2320-PH129
		.062	.437	2321-N129	2321-T129	2321-PH129
		.062	.500	2322-N129	2322-T129	2322-PH129
		.062	.562	2323-N129	2323-T129	2323-PH129
		.062	.625	2326-N129	2326-T129	2326-PH129
6 (.138)	.141	.016	.187	2201-N141	2201-T141	2201-PH141
		.016	.218	2202-N141	2202-T141	2202-PH141
		.016	.250	2203-N141	2203-T141	2203-PH141
		.016	.281	2204-N141	2204-T141	2204-PH141
		.016	.312	2205-N141	2205-T141	2205-PH141
		.031	.218	2253-N141	2253-T141	2253-PH141
		.031	.250	2254-N141	2254-T141	2254-PH141
		.031	.281	2255-N141	2255-T141	2255-PH141
		.031	.312	2256-N141	2256-T141	2256-PH141

Continued

SCREW SIZE	I. D.	L. O.	O. D.	MATERIAL NYLON (N)	TEFLON (T)	PHENOLIC†
6 (.138)	.141	.031	.343	2257-N141	2257-T141	2257-PH141
		.031	.375	2258-N141	2258-T141	2258-PH141
		.031	.437	2259-N141	2259-T141	2259-PH141
		.031	.500	2260-N141	2260-T141	2260-PH141
		.031	.562	2261-N141	2261-T141	2261-PH141
		.031	.625	2264-N141	2264-T141	2264-PH141
		.047	.312	2289-N141	2289-T141	2289-PH141
		.062	.250	2316-N141	2316-T141	2316-PH141
		.062	.281	2317-N141	2317-T141	2317-PH141
		.062	.312	2318-N141	2318-T141	2318-PH141
		.062	.343	2319-N141	2319-T141	2319-PH141
		.062	.375	2320-N141	2320-T141	2320-PH141
		.062	.437	2321-N141	2321-T141	2321-PH141
		.062	.500	2322-N141	2322-T141	2322-PH141
		.062	.562	2323-N141	2323-T141	2323-PH141
		.062	.625	2326-N141	2326-T141	2326-PH141
		.093	.312	2340-N141	2340-T141	2340-PH141
		.093	.343	2341-N141	2341-T141	2341-PH141
		.093	.375	2342-N141	2342-T141	2342-PH141
		.093	.437	2344-N141	2344-T141	2344-PH141
		.093	.500	2345-N141	2345-T141	2345-PH141
		.093	.562	2346-N141	2346-T141	2346-PH141
		.093	.625	2349-N141	2349-T141	2349-PH141
	.150	.020	.312	2222-N150	2222-T150	2222-PH150
		.031	.312	2256-N150	2256-T150	2256-PH150
		.040	.312	2276-N150	2276-T150	2276-PH150
		.050	.312	2301-N150	2301-T150	2301-PH150
		.062	.312	2318-N150	2318-T150	2318-PH150
	.156	.031	.312	2256-N156	2256-T156	2256-PH156
		.031	.500	2260-N156	2260-T156	2260-PH156
		.063	.375	2320-N156	2320-T156	2320-PH156
	.158	.135	.375	2376-N158	2376-T158	2376-PH158
	.163	.125	.377	2361-N163	2361-T163	2361-PH163
	.163	.125	.500	2363-N163	2363-T163	2363-PH163

†PHENOLIC (PH)

5 Pasco Hill Road • Cromwell, CT 06416-1093
Phone: 860-828-0847 • Call Toll Free: 800-243-6032 • Fax: 860-828-0381
Web Address: http://www.amatom.com • E-Mail: sales@amatom.com

AMATOM®

FLAT INSULATING WASHERS

SCREW CLEARANCE NOS. 8, 10, 12

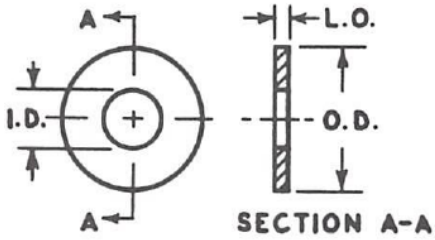

TOLERANCES	
I.D.	+.010, −.000
O.D.	+.015, −.005
L.O.	±.003 for .016 - .032 Thick.
	±.005 for .040 - .047 Thick
	±.006 for .062 Thick.
	±.009 for .093 Thick.
	±.010 for .094 Thick. & over

SCREW SIZE	I. D.	L. O.	O. D.	MATERIAL	NYLON (N)	TEFLON (T)	PHENOLIC†
8 (.164)	.165	.125	.625		2367-N165	2367-T165	2367-PH165
	.171	.020	.375		2224-N171	2224-T171	2224-PH171
		.031	.250		2254-N171	2254-T171	2254-PH171
		.031	.281		2255-N171	2255-T171	2255-PH171
		.031	.312		2256-N171	2256-T171	2256-PH171
		.031	.343		2257-N171	2257-T171	2257-PH171
		.031	.375		2258-N171	2258-T171	2258-PH171
		.031	.437		2259-N171	2259-T171	2259-PH171
		.031	.500		2260-N171	2260-T171	2260-PH171
		.031	.562		2261-N171	2261-T171	2261-PH171
		.031	.625		2264-N171	2264-T171	2264-PH171
		.040	.375		2278-N171	2278-T171	2278-PH171
		.050	.375		2303-N171	2303-T171	2303-PH171
		.062	.312		2318-N171	2318-T171	2318-PH171
		.062	.343		2319-N171	2319-T171	2319-PH171
		.062	.375		2320-N171	2320-T171	2320-PH171
		.062	.437		2321-N171	2321-T171	2321-PH171
		.062	.500		2322-N171	2322-T171	2322-PH171
		.062	.562		2323-N171	2323-T171	2323-PH171
		.062	.625		2326-N171	2326-T171	2326-PH171
	.187	.016	.625		2213-N187	2213-T187	2213-PH187
		.031	.375		2258-N187	2258-T187	2258-PH187
		.062	.312		2318-N187	2318-T187	2318-PH187
		.062	.437		2321-N187	2321-T187	2321-PH187
		.093	.375		2342-N187	2342-T187	2342-PH187
		.093	.437		2344-N187	2344-T187	2344-PH187
		.093	.500		2345-N187	2345-T187	2345-PH187
		.093	.562		2346-N187	2346-T187	2346-PH187
		.093	.625		2349-N187	2349-T187	2349-PH187
10 (.190)	.190	.125	.318		2359-N190	2359-T190	2359-PH190
	.194	.020	.437		2225-N194	2225-T194	2225-PH194
		.031	.312		2256-N194	2256-T194	2256-PH194
		.031	.343		2257-N194	2257-T194	2257-PH194
		.031	.375		2258-N194	2258-T194	2258-PH194
		.031	.437		2259-N194	2259-T194	2259-PH194

Continued

SCREW SIZE	I. D.	L. O.	O. D.	MATERIAL	NYLON (N)	TEFLON (T)	PHENOLIC
10 (.190)	.190	.031	.500		2260-N194	2260-T194	2260-PH194
	.194	.031	.562		2261-N194	2261-T194	2261-PH194
		.031	.625		2264-N194	2264-T194	2264-PH194
		.031	.687		2265-N194	2265-T194	2265-PH194
		.031	.750		2267-N194	2267-T194	2267-PH194
		.040	.437		2279-N194	2279-T194	2279-PH194
		.050	.437		2304-N194	2304-T194	2304-PH194
		.062	.312		2318-N194	2318-T194	2318-PH194
		.062	.343		2319-N194	2319-T194	2319-PH194
		.062	.375		2320-N194	2320-T194	2320-PH194
		.062	.437		2321-N194	2321-T194	2321-PH194
		.062	.500		2322-N194	2322-T194	2322-PH194
		.062	.562		2323-N194	2323-T194	2323-PH194
		.062	.625		2326-N194	2326-T194	2326-PH194
		.062	.687		2327-N194	2327-T194	2327-PH194
		.062	.750		2329-N194	2329-T194	2329-PH194
		.093	.375		2342-N194	2342-T194	2342-PH194
		.093	.437		2344-N194	2344-T194	2344-PH194
		.093	.500		2345-N194	2345-T194	2345-PH194
		.093	.562		2346-N194	2346-T194	2346-PH194
		.093	.625		2349-N194	2349-T194	2349-PH194
		.093	.687		2350-N194	2350-T194	2350-PH194
		.093	.750		2352-N194	2352-T194	2352-PH194
	.200	.062	.437		2321-N200	2321-T200	2321-PH200
12 (.216)	.219	.031	.312		2256-N219	2256-T219	2256-PH219
		.031	.375		2258-N219	2258-T219	2258-PH219
		.031	.437		2259-N219	2259-T219	2259-PH219
		.031	.500		2260-N219	2260-T219	2260-PH219
		.062	.375		2320-N219	2320-T219	2320-PH219
		.062	.437		2321-N219	2321-T219	2321-PH219
		.062	.500		2322-N219	2322-T219	2322-PH219
		.093	.437		2344-N219	2344-T219	2344-PH219
		.093	.500		2345-N219	2345-T219	2345-PH219
		.125	.278		2358-N219	2358-T219	2358-PH219

†PHENOLIC (PH)

5 Pasco Hill Road • Cromwell, CT 06416-1093
Phone: 860-828-0847 • Call Toll Free: 800-243-6032 • Fax: 860-828-0381
Web Address: http://www.amatom.com • E-Mail: sales@amatom.com

FLAT INSULATING WASHERS

SCREW CLEARANCE NOS. 1/4, 5/16, 3/8

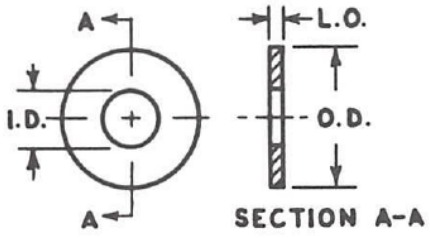

TOLERANCES	
I. D.	+.010, -.000
O. D.	+.015, -.005
L. O.	±.003 for .016 - .032 Thick.
	±.005 for .040 - .047 Thick
	±.006 for .062 Thick.
	±.009 for .093 Thick.
	±.010 for .094 Thick. & over

SCREW SIZE	I. D.	L. O.	O. D.	MATERIAL NYLON (N)	TEFLON (T)	PHENOLIC†
1/4 (.250)	.253	.031	.437	2259-N253	2259-T253	2259-PH253
		.031	.500	2260-N253	2260-T253	2260-PH253
		.031	.562	2261-N253	2261-T253	2261-PH253
		.031	.625	2264-N253	2264-T253	2264-PH253
		.031	.687	2265-N253	2265-T253	2265-PH253
		.031	.750	2267-N253	2267-T253	2267-PH253
		.031	.812	2268-N253	2268-T253	2268-PH253
		.031	.875	2269-N253	2269-T253	2269-PH253
		.047	.500	2293-N253	2293-T253	2293-PH253
		.062	.437	2321-N253	2321-T253	2321-PH253
		.062	.500	2322-N253	2322-T253	2322-PH253
		.062	.562	2323-N253	2323-T253	2323-PH253
		.062	.625	2326-N253	2326-T253	2326-PH253
		.062	.687	2327-N253	2327-T253	2327-PH253
		.062	.750	2329-N253	2329-T253	2329-PH253
		.062	.812	2330-N253	2330-T253	2330-PH253
		.062	.875	2331-N253	2331-T253	2331-PH253
		.093	.437	2344-N253	2344-T253	2344-PH253
		.093	.500	2345-N253	2345-T253	2345-PH253
		.093	.562	2346-N253	2346-T253	2346-PH253
		.093	.625	2349-N253	2349-T253	2349-PH253
		.093	.687	2350-N253	2350-T253	2350-PH253
		.125	.312	2359-N253	2359-T253	2359-PH253
	.260	.020	.687	2231-N260	2231-T260	2231-PH260
		.031	.687	2265-N260	2265-T260	2265-PH260
		.031	.875	2269-N260	2269-T260	2269-PH260
		.040	.687	2285-N260	2285-T260	2285-PH260
		.050	.687	2310-N260	2310-T260	2310-PH260
		.062	.562	2323-N260	2323-T260	2323-PH260
		.062	.687	2327-N260	2327-T260	2327-PH260
	.281	.062	.625	2326-N281	2326-T281	2326-PH281
	.307	.125	.583	2365-N307	2365-T307	2365-PH307

Continued

SCREW SIZE	I. D.	L. O.	O. D.	MATERIAL NYLON (N)	TEFLON (T)	PHENOLIC†
5/16 (.312)	.317	.020	.500	2226-N317	2226-T317	2226-PH317
		.031	.500	2260-N317	2260-T317	2260-PH317
		.031	.562	2261-N317	2261-T317	2261-PH317
		.031	.625	2264-N317	2264-T317	2264-PH317
		.031	.687	2265-N317	2265-T317	2265-PH317
		.031	.750	2267-N317	2267-T317	2267-PH317
		.062	.500	2322-N317	2322-T317	2322-PH317
		.062	.562	2323-N317	2323-T317	2323-PH317
		.062	.625	2326-N317	2326-T317	2326-PH317
		.062	.687	2327-N317	2327-T317	2327-PH317
		.062	.750	2329-N317	2329-T317	2329-PH317
		.093	.500	2345-N317	2345-T317	2345-PH317
		.093	.562	2346-N317	2346-T317	2346-PH317
		.093	.625	2349-N317	2349-T317	2349-PH317
		.093	.687	2350-N317	2350-T317	2350-PH317
		.093	.750	2352-N317	2352-T317	2352-PH317
3/8 (.375)	.385	.031	.625	2264-N385	2264-T385	2264-PH385
		.031	.687	2265-N385	2265-T385	2265-PH385
		.031	.750	2267-N385	2267-T385	2267-PH385
		.031	1.000	2270-N385	2270-T385	2270-PH385
		.047	.625	2297-N385	2297-T385	2297-PH385
		.062	.625	2326-N385	2326-T385	2326-PH385

†PHENOLIC (PH)

Continued next page

5 Pasco Hill Road • Cromwell, CT 06416-1093
Phone: 860-828-0847 • Call Toll Free: 800-243-6032 • Fax: 860-828-0381
Web Address: http://www.amatom.com • E-Mail: sales@amatom.com

AMATOM®

FLAT INSULATING WASHERS

SCREW CLEARANCE NOS. 3/8, 7/16, 1/2, 9/16

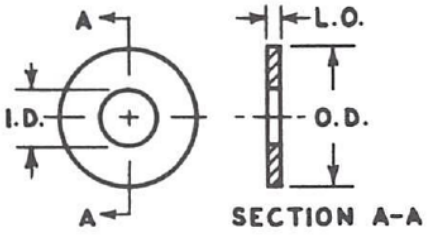

TOLERANCES	
I. D.	+.010, -.000
O. D.	+.015, -.005
L. O.	±.003 for .016 - .032 Thick. ±.005 for .040 - .047 Thick ±.006 for .062 Thick. ±.009 for .093 Thick. ±.010 for .094 Thick. & over

Continued from previous page

SCREW SIZE	I. D.	L. O.	O. D.	MATERIAL	NYLON (N)	TEFLON (T)	PHENOLIC†
3/8 (.375)	.385	.062	.687		2327-N385	2327-T385	2327-PH385
		.062	.750		2329-N385	2329-T385	2329-PH385
		.062	1.000		2332-N385	2332-T385	2332-PH385
		.093	.625		2349-N385	2349-T385	2349-PH385
		.093	.687		2350-N385	2350-T385	2350-PH385
		.093	.750		2352-N385	2352-T385	2352-PH385
		.093	1.000		2355-N385	2355-T385	2355-PH385
	.391	.047	.609		2296-N391	2296-T391	2296-PH391
	.395	.025	.437		2242-N395	2242-T395	2242-PH395
	.406	.062	.812		2330-N406	2330-T406	2330-PH406
7/16 (.437)	.443	.031	.687		2265-N443	2265-T443	2265-PH443
		.031	.750		2267-N443	2267-T443	2267-PH443
		.031	.812		2268-N443	2268-T443	2268-PH443
		.031	.875		2269-N443	2269-T443	2269-PH443
		.062	.687		2327-N443	2327-T443	2327-PH443
		.062	.750		2329-N443	2329-T443	2329-PH443
		.062	.812		2330-N443	2330-T443	2330-PH443
		.062	.875		2331-N443	2331-T443	2331-PH443
		.093	.687		2350-N443	2350-T443	2350-PH443
		.093	.750		2352-N443	2352-T443	2352-PH443
		.093	.812		2353-N443	2353-T443	2353-PH443
		.093	.875		2354-N443	2354-T443	2354-PH443
	.473	.031	.750		2267-N473	2267-T473	2267-PH473

Continued

SCREW SIZE	I. D.	L. O.	O. D.	MATERIAL	NYLON (N)	TEFLON (T)	PHENOLIC†
1/2 (.500)	.515	.031	.750		2267-N515	2267-T515	2267-PH515
		.031	.875		2269-N515	2269-T515	2269-PH515
		.031	1.000		2270-N515	2270-T515	2270-PH515
		.062	.750		2329-N515	2329-T515	2329-PH515
		.062	.875		2331-N515	2331-T515	2331-PH515
		.062	1.000		2332-N515	2332-T515	2332-PH515
		.093	.750		2352-N515	2352-T515	2352-PH515
		.093	.875		2354-N515	2354-T515	2354-PH515
		.093	1.000		2355-N515	2355-T515	2355-PH515
	.525	.125	.730		2369-N525	2369-T525	2369-PH525
9/16 (.562)	.569	.031	.750		2267-N569	2267-T569	2267-PH569
		.031	.875		2269-N569	2269-T569	2269-PH569
		.031	1.000		2270-N569	2270-T569	2270-PH569
		.031	1.125		2271-N569	2271-T569	2271-PH569
		.031	1.250		2272-N569	2272-T569	2272-PH569
		.062	.750		2329-N569	2329-T569	2329-PH569
		.062	.875		2331-N569	2331-T569	2331-PH569
		.062	1.000		2332-N569	2332-T569	2332-PH569
		.062	1.125		2333-N569	2333-T569	2333-PH569
		.062	1.250		2334-N569	2334-T569	2334-PH569
		.093	.750		2352-N569	2352-T569	2352-PH569
		.093	.875		2354-N569	2354-T569	2354-PH569
		.093	1.000		2355-N569	2355-T569	2355-PH569
		.093	1.125		2356-N569	2356-T569	2356-PH569
		.093	1.250		2357-N569	2357-T569	2357-PH569
	.567	.125	.730		2369-N567	2369-T567	2369-PH567
	.569	.125	.875		2372-N569	2372-T569	2372-PH569
		.125	1.000		2373-N569	2373-T569	2373-PH569
		.125	1.125		2374-N569	2374-T569	2374-PH569
		.125	1.250		2375-N569	2375-T569	2375-PH569

†PHENOLIC (PH)

5 Pasco Hill Road • Cromwell, CT 06416-1093
Phone: 860-828-0847 • Call Toll Free: 800-243-6032 • Fax: 860-828-0381
Web Address: http://www.amatom.com • E-Mail: sales@amatom.com

INSULATING SHOULDER WASHERS

SCREW CLEARANCE NOS. 00, 0

TOLERANCES			
I. D.	+.010, -.000	L. H.	±.005
D. S.	+.000, -.010	L. O.	±.005 for .047 - .065 Thick.
L. S.	REF.		±.008 for .075 - .094 Thick.
O. D.	+.015, -.005		±.010 for .095 Thick. & over

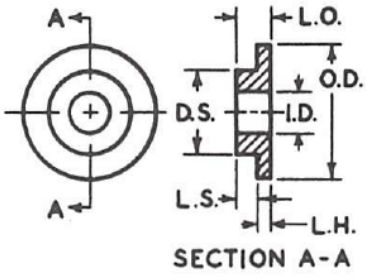

SECTION A-A

SCREW SIZE	I. D.	D. S.	L. S.	O. D.	L. H.	L. O.	MATERIAL	NYLON (N)	TEFLON (T)	PHENOLIC (PH)
	.046	.140	.015	.187	.015	.030		2552-14015-N046	2552-14015-T046	**2552-14015-PH046
00 (.047)	.055	.125	.028	.250	.028	.056		2630-12528-N055	2630-12528-T055	**2630-12528-PH055
	▼	.125	.060	.344	.016	.076		2561-12560-N055	2561-12560-T055	**2561-12560-PH055
0 (.060)	.063	.090	.025	.156	.031	.056		2626-09025-N063	2626-09025-T063	2626-09025-PH063
		.090	.025	.187	.031	.056		2627-09025-N063	2627-09025-T063	2627-09025-PH063
		.090	.025	.250	.031	.056		2630-09025-N063	2630-09025-T063	2630-09025-PH063
		.092	.017	.156	.013	.030		2551-09217-N063	2551-09217-T063	**2551-09217-PH063
		.122	.025	.156	.031	.056		2626-12225-N063	2626-12225-T063	2626-12225-PH063
		.122	.025	.187	.031	.056		2627-12225-N063	2627-12225-T063	2627-12225-PH063
		.122	.025	.250	.031	.056		2630-12225-N063	2630-12225-T063	2630-12225-PH063
		.125	.020	.187	.040	.060		2657-12520-N063	2657-12520-T063	2657-12520-PH063
		.125	.030	.187	.025	.055		2602-12530-N063	2602-12530-T063	**2602-12530-PH063
		.156	.075	.250	.032	.107		2630-15675-N063	2630-15675-T063	2630-15675-PH063
	.078	.150	.050	.215	.031	.081		2628-15050-N078	2628-15050-T078	2628-15050-PH078
	.083	.123	.022	.240	.018	.040		2579-12322-N083	2579-12322-T083	**2579-12322-PH083
	▼	.135	.022	.240	.018	.040		2579-13522-N083	2579-13522-T083	**2579-13522-PH083

NOTE: ** Not available machined in Phenolic with L.H. thinner than .031. Can be molded if required. Special order only.

5 Pasco Hill Road • Cromwell, CT 06416-1093
Phone: 860-828-0847 • Call Toll Free: 800-243-6032 • Fax: 860-828-0381
Web Address: http://www.amatom.com • E-Mail: sales@amatom.com

AMATOM®

INSULATING SHOULDER WASHERS

SCREW CLEARANCE NO. 2

TOLERANCES			
I. D.	+.010, -.000	L. H.	±.005
D. S.	+.000, -.010	L. O.	±.005 for .047 - .065 Thick.
L. S.	REF.		±.008 for .075 - .094 Thick.
O. D.	+.015, -.005		±.010 for .095 Thick. & over

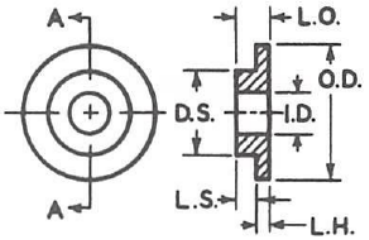

SECTION A-A

SCREW SIZE	I. D.	D. S.	L. S.	O. D.	L. H.	L. O.	MATERIAL		
							NYLON (N)	TEFLON (T)	PHENOLIC (PH)
2 (.086)	.093	.122	.025	.187	.031	.056	2627-12225-N093	2627-12225-T093	2627-12225-PH093
		.122	.025	.187	.062	.087	2701-12225-N093	2701-12225-T093	2701-12225-PH093
		.122	.025	.218	.031	.056	2628-12225-N093	2628-12225-T093	2628-12225-PH093
		.122	.025	.218	.062	.087	2702-12225-N093	2702-12225-T093	2702-12225-PH093
		.122	.025	.250	.031	.056	2630-12225-N093	2630-12225-T093	2630-12225-PH093
		.122	.025	.250	.062	.087	2704-12225-N093	2704-12225-T093	2704-12225-PH093
		.122	.025	.312	.031	.056	2634-12225-N093	2634-12225-T093	2634-12225-PH093
		.122	.025	.312	.062	.087	2707-12225-N093	2707-12225-T093	2707-12225-PH093
		.122	.025	.375	.031	.056	2638-12225-N093	2638-12225-T093	2638-12225-PH093
		.122	.025	.375	.062	.087	2711-12225-N093	2711-12225-T093	2711-12225-PH093
		.124	.007	.234	.020	.027	2579-12407-N093	2579-12407-T093	**2579-12407-PH093
		.124	.025	.250	.031	.056	2630-12425-N093	2630-12425-T093	2630-12425-PH093
		.140	.020	.250	.031	.051	2630-14020-N093	2630-14020-T093	2630-14020-PH093
		.152	.025	.218	.031	.056	2628-15225-N093	2628-15225-T093	2628-15225-PH093
		.152	.025	.218	.062	.087	2702-15225-N093	2702-15225-T093	2702-15225-PH093
		.152	.025	.250	.031	.056	2630-15225-N093	2630-15225-T093	2630-15225-PH093
		.152	.025	.250	.062	.087	2704-15225-N093	2704-15225-T093	2704-15225-PH093
		.152	.025	.312	.031	.056	2634-15225-N093	2634-15225-T093	2634-15225-PH093
		.152	.025	.312	.062	.087	2707-15225-N093	2707-15225-T093	2707-15225-PH093
		.152	.025	.375	.031	.056	2638-15225-N093	2638-15225-T093	2638-15225-PH093
		.152	.025	.375	.062	.087	2711-15225-N093	2711-15225-T093	2711-15225-PH093
		.154	.008	.219	.033	.041	2628-15408-N093	2628-15408-T093	2628-15408-PH093
		.157	.015	.265	.026	.041	2606-15715-N093	2606-15715-T093	2606-15715-PH093
		.157	.046	.250	.046	.092	2676-15746-N093	2676-15746-T093	2676-15746-PH093
		.183	.030	.317	.060	.090	2707-18330-N093	2707-18330-T093	2707-18330-PH093
		.185	.025	.250	.031	.056	2630-18525-N093	2630-18525-T093	2630-18525-PH093
		.185	.025	.250	.062	.087	2704-18525-N093	2704-18525-T093	2704-18525-PH093
		.185	.025	.312	.031	.056	2634-18525-N093	2634-18525-T093	2634-18525-PH093
		.185	.025	.312	.062	.087	2707-18525-N093	2707-18525-T093	2707-18525-PH093
		.185	.025	.375	.031	.056	2638-18525-N093	2638-18525-T093	2638-18525-PH093
		.185	.025	.375	.062	.087	2711-18525-N093	2711-18525-T093	2711-18525-PH093
		.185	.025	.437	.031	.056	2640-18525-N093	2640-18525-T093	2640-18525-PH093
		.185	.025	.437	.062	.087	2713-18525-N093	2713-18525-T093	2713-18525-PH093
	.098	.138	.020	.312	.031	.051	2634-13820-N098	2634-13820-T098	2634-13820-PH098
		.170	.031	.218	.062	.093	2702-17031-N098	2702-17031-T098	2702-17031-PH098

NOTE: ** Not available machined in Phenolic with L.H. thinner than .031. Can be molded if required. Special order only.

5 Pasco Hill Road • Cromwell, CT 06416-1093
Phone: 860-828-0847 • Call Toll Free: 800-243-6032 • Fax: 860-828-0381
Web Address: http://www.amatom.com • E-Mail: sales@amatom.com

INSULATING SHOULDER WASHERS

SCREW CLEARANCE NO. 3

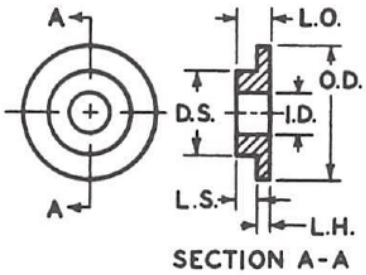

SECTION A-A

TOLERANCES			
I. D.	+.010, -.000	L. H.	±.005
D. S.	+.000, -.010	L. O.	±.005 for .047 - .065 Thick.
L. S.	REF.		±.008 for .075 - .094 Thick.
O. D.	+.015, -.005		±.010 for .095 Thick. & over

SCREW SIZE	I. D.	D. S.	L. S.	O. D.	L. H.	L. O.	MATERIAL			
								NYLON (N)	TEFLON (T)	PHENOLIC (PH)
3 (.099)	.101	.152	.025	.218	.031	.056		2628-15225-N101	2628-15225-T101	2628-15225-PH101
		.152	.025	.218	.062	.087		2702-15225-N101	2702-15225-T101	2702-15225-PH101
		.152	.025	.250	.031	.056		2630-15225-N101	2630-15225-T101	2630-15225-PH101
		.152	.025	.250	.062	.087		2704-15225-N101	2704-15225-T101	2704-15225-PH101
		.152	.025	.312	.031	.056		2634-15225-N101	2634-15225-T101	2634-15225-PH101
		.152	.025	.312	.062	.087		2707-15225-N101	2707-15225-T101	2707-15225-PH101
		.152	.025	.375	.031	.056		2638-15225-N101	2638-15225-T101	2638-15225-PH101
		.152	.025	.375	.062	.087		2711-15225-N101	2711-15225-T101	2711-15225-PH101
		.152	.062	.224	.038	.100		2658-15262-N101	2658-15262-T101	2658-15262-PH101
		.160	.078	.250	.034	.112		2630-16078-N101	2630-16078-T101	2630-16078-PH101
		.165	.063	.312	.062	.125		2707-16563-N101	2707-16563-T101	2707-16563-PH101
		.171	.015	.250	.031	.046		2630-17115-N101	2630-17115-T101	2630-17115-PH101
		.185	.025	.250	.031	.056		2630-18525-N101	2630-18525-T101	2630-18525-PH101
		.185	.025	.250	.062	.087		2704-18525-N101	2704-18525-T101	2704-18525-PH101
		.185	.025	.312	.031	.056		2634-18525-N101	2634-18525-T101	2634-18525-PH101
		.185	.025	.312	.062	.087		2707-18525-N101	2707-18525-T101	2707-18525-PH101
		.185	.025	.375	.031	.056		2638-18525-N101	2638-18525-T101	2638-18525-PH101
		.185	.025	.375	.062	.087		2711-18525-N101	2711-18525-T101	2711-18525-PH101
		.185	.025	.437	.031	.056		2640-18525-N101	2640-18525-T101	2640-18525-PH101
		.185	.025	.437	.062	.087		2713-18525-N101	2713-18525-T101	2713-18525-PH101
		.185	.050	.250	.031	.081		2630-18550-N101	2630-18550-T101	2630-18550-PH101
		.185	.050	.250	.062	.112		2704-18550-N101	2704-18550-T101	2704-18550-PH101
		.185	.050	.312	.031	.081		2634-18550-N101	2634-18550-T101	2634-18550-PH101
		.185	.050	.312	.062	.112		2707-18550-N101	2707-18550-T101	2707-18550-PH101
		.185	.050	.375	.031	.081		2638-18550-N101	2638-18550-T101	2638-18550-PH101
		.185	.050	.375	.062	.112		2711-18550-N101	2711-18550-T101	2711-18550-PH101

Continued next page

5 Pasco Hill Road • Cromwell, CT 06416-1093
Phone: 860-828-0847 • Call Toll Free: 800-243-6032 • Fax: 860-828-0381
Web Address: http://www.amatom.com • E-Mail: sales@amatom.com

AMATOM®

INSULATING SHOULDER WASHERS

SCREW CLEARANCE NO. 3

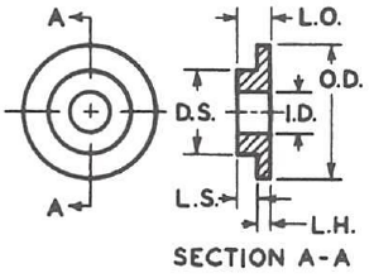

SECTION A-A

TOLERANCES			
I. D.	+.010, -.000	L. H.	±.005
D. S.	+.000, -.010	L. O.	±.005 for .047 - .065 Thick.
L. S.	REF.		±.008 for .075 - .094 Thick.
O. D.	+.015, -.005		±.010 for .095 Thick. & over

Continued from previous page

SCREW SIZE	I. D.	D. S.	L. S.	O. D.	L. H.	L. O.	MATERIAL		
							NYLON (N)	TEFLON (T)	PHENOLIC (PH)
3 (.099)	.101	.185	.050	.437	.031	.081	2640-18550-N101	2640-18550-T101	2640-18550-PH101
		.185	.050	.437	.062	.112	2713-18550-N101	2713-18550-T101	2713-18550-PH101
		.187	.062	.375	.070	.132	2727-18762-N101	2727-18762-T101	2727-18762-PH101
		.203	.020	.375	.020	.040	2588-20320-N101	2588-20320-T101	**2588-20320-PH101
		.203	.055	.296	.055	.110	2690-20355-N101	2690-20355-T101	2690-20355-PH101
		.216	.025	.312	.031	.056	2634-21625-N101	2634-21625-T101	2634-21625-PH101
		.216	.025	.312	.062	.087	2707-21625-N101	2707-21625-T101	2707-21625-PH101
		.216	.025	.375	.031	.056	2638-21625-N101	2638-21625-T101	2638-21625-PH101
		.216	.025	.375	.062	.087	2711-21625-N101	2711-21625-T101	2711-21625-PH101
		.216	.025	.437	.031	.056	2640-21625-N101	2640-21625-T101	2640-21625-PH101
		.216	.025	.437	.062	.087	2713-21625-N101	2713-21625-T101	2713-21625-PH101
		.216	.025	.500	.031	.056	2642-21625-N101	2642-21625-T101	2642-21625-PH101
		.216	.025	.500	.062	.087	2715-21625-N101	2715-21625-T101	2715-21625-PH101
		.216	.050	.312	.031	.081	2634-21650-N101	2634-21650-T101	2634-21650-PH101
		.216	.050	.312	.062	.112	2707-21650-N101	2707-21650-T101	2707-21650-PH101
		.216	.050	.375	.031	.081	2638-21650-N101	2638-21650-T101	2638-21650-PH101
		.216	.050	.375	.062	.112	2711-21650-N101	2711-21650-T101	2711-21650-PH101
		.216	.050	.437	.031	.081	2640-21650-N101	2640-21650-T101	2640-21650-PH101
		.216	.050	.437	.062	.112	2713-21650-N101	2713-21650-T101	2713-21650-PH101
		.216	.050	.500	.031	.081	2642-21650-N101	2642-21650-T101	2642-21650-PH101
		.216	.050	.500	.062	.112	2715-21650-N101	2715-21650-T101	2715-21650-PH101
	.113	.187	.032	.250	.032	.064	2630-18732-N113	2630-18732-T113	2630-18732-PH113
		.203	.062	.312	.031	.093	2634-20362-N113	2634-20362-T113	2634-20362-PH113
		.244	.020	.375	.062	.082	2711-24420-N113	2711-24420-T113	2711-24420-PH113
		.150	.018	.245	.062	.080	2704-15018-N113	2704-15018-T113	2704-15018-PH113
	.115	.175	.062	.281	.031	.093	2632-17562-N115	2632-17562-T115	2632-17562-PH115
		.185	.025	.343	.062	.087	2709-18525-N115	2709-18525-T115	2709-18525-PH115

NOTE: ** Not available machined in Phenolic with L.H. thinner than .031. Can be molded if required. Special order only.

5 Pasco Hill Road • Cromwell, CT 06416-1093
Phone: 860-828-0847 • Call Toll Free: 800-243-6032 • Fax: 860-828-0381
Web Address: http://www.amatom.com • E-Mail: sales@amatom.com

INSULATING SHOULDER WASHERS

SCREW CLEARANCE NO. 4

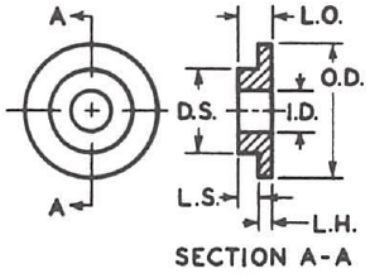

SECTION A-A

TOLERANCES			
I. D.	+.010, -.000	L. H.	±.005
D. S.	+.000, -.010	L. O.	±.005 for .047 - .065 Thick.
L. S.	REF.		±.008 for .075 - .094 Thick.
O. D.	+.015, -.005		±.010 for .095 Thick. & over

SCREW SIZE	I. D.	D. S.	L. S.	O. D.	L. H.	L. O.	MATERIAL		
							NYLON (N)	TEFLON (T)	PHENOLIC (PH)
4 (.112)	.116	.185	.027	.250	.031	.058	2630-18527-N116	2630-18527-T116	2630-18527-PH116
		.185	.027	.250	.062	.089	2704-18527-N116	2704-18527-T116	2704-18527-PH116
		.185	.027	.312	.031	.058	2634-18527-N116	2634-18527-T116	2634-18527-PH116
		.185	.027	.312	.062	.089	2707-18527-N116	2707-18527-T116	2707-18527-PH116
		.185	.027	.375	.031	.058	2638-18527-N116	2638-18527-T116	2638-18527-PH116
		.185	.027	.375	.062	.089	2711-18527-N116	2711-18527-T116	2711-18527-PH116
		.185	.027	.437	.031	.058	2640-18527-N116	2640-18527-T116	2640-18527-PH116
		.185	.027	.437	.062	.089	2713-18527-N116	2713-18527-T116	2713-18527-PH116
		.185	.050	.250	.031	.081	2630-18550-N116	2630-18550-T116	2630-18550-PH116
		.185	.050	.250	.062	.112	2704-18550-N116	2704-18550-T116	2704-18550-PH116
		.185	.050	.312	.031	.081	2634-18550-N116	2634-18550-T116	2634-18550-PH116
		.185	.050	.312	.062	.112	2707-18550-N116	2707-18550-T116	2707-18550-PH116
		.185	.050	.375	.031	.081	2638-18550-N116	2638-18550-T116	2638-18550-PH116
		.185	.050	.375	.062	.112	2711-18550-N116	2711-18550-T116	2711-18550-PH116
		.185	.050	.437	.031	.081	2640-18550-N116	2640-18550-T116	2640-18550-PH116
		.185	.050	.437	.062	.112	2713-18550-N116	2713-18550-T116	2713-18550-PH116
		.187	.063	.279	.062	.125	2705-18763-N116	2705-18763-T116	2705-18763-PH116
		.216	.027	.312	.031	.058	2634-21627-N116	2634-21627-T116	2634-21627-PH116
		.216	.027	.312	.062	.089	2707-21627-N116	2707-21627-T116	2707-21627-PH116
		.216	.027	.375	.031	.058	2638-21627-N116	2638-21627-T116	2638-21627-PH116
		.216	.027	.375	.062	.089	2711-21627-N116	2711-21627-T116	2711-21627-PH116
		.216	.027	.437	.031	.058	2640-21627-N116	2640-21627-T116	2640-21627-PH116
		.216	.027	.437	.062	.089	2713-21627-N116	2713-21627-T116	2713-21627-PH116
		.216	.027	.468	.031	.058	2641-21627-N116	2641-21627-T116	2641-21627-PH116
		.216	.027	.468	.062	.089	2714-21627-N116	2714-21627-T116	2714-21627-PH116
		.216	.050	.312	.031	.081	2634-21650-N116	2634-21650-T116	2634-21650-PH116
		.216	.050	.312	.062	.112	2707-21650-N116	2707-21650-T116	2707-21650-PH116
		.216	.050	.375	.031	.081	2638-21650-N116	2638-21650-T116	2638-21650-PH116
		.216	.050	.375	.062	.112	2711-21650-N116	2711-21650-T116	2711-21650-PH116
		.216	.050	.437	.031	.081	2640-21650-N116	2640-21650-T116	2640-21650-PH116
		.216	.050	.437	.062	.112	2713-21650-N116	2713-21650-T116	2713-21650-PH116
		.216	.050	.468	.031	.081	2641-21650-N116	2641-21650-T116	2641-21650-PH116
		.216	.050	.468	.062	.112	2714-21650-N116	2714-21650-T116	2714-21650-PH116
		.248	.027	.343	.031	.058	2636-24827-N116	2636-24827-T116	2636-24827-PH116
		.248	.027	.343	.062	.089	2709-24827-N116	2709-24827-T116	2709-24827-PH116
		.248	.027	.375	.031	.058	2638-24827-N116	2638-24827-T116	2638-24827-PH116

Continued next page

5 Pasco Hill Road • Cromwell, CT 06416-1093
Phone: 860-828-0847 • Call Toll Free: 800-243-6032 • Fax: 860-828-0381
Web Address: http://www.amatom.com • E-Mail: sales@amatom.com

INSULATING SHOULDER WASHERS

SCREW CLEARANCE NO. 4

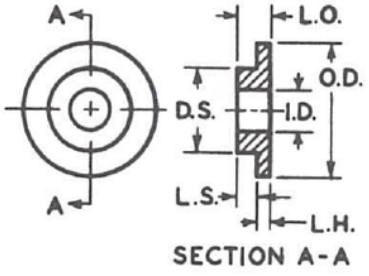

SECTION A-A

TOLERANCES			
I. D.	+.010, -.000	L. H.	±.005
D. S.	+.000, -.010	L. O.	±.005 for .047 - .065 Thick.
L. S.	REF.		±.008 for .075 - .094 Thick.
O. D.	+.015, -.005		±.010 for .095 Thick. & over

Continued from previous page

SCREW SIZE	I. D.	D. S.	L. S.	O. D.	L. H.	L. O.	MATERIAL			
								NYLON (N)	TEFLON (T)	PHENOLIC (PH)
4 (.112)	.116	.248	.027	.375	.062	.089		2711-24827-N116	2711-24827-T116	2711-24827-PH116
		.248	.027	.437	.031	.058		2640-24827-N116	2640-24827-T116	2640-24827-PH116
		.248	.027	.437	.062	.089		2713-24827-N116	2713-24827-T116	2713-24827-PH116
		.248	.027	.468	.031	.058		2641-24827-N116	2641-24827-T116	2641-24827-PH116
		.248	.027	.468	.062	.089		2714-24827-N116	2714-24827-T116	2714-24827-PH116
		.248	.027	.500	.031	.058		2642-24827-N116	2642-24827-T116	2642-24827-PH116
		.248	.027	.500	.062	.089		2715-24827-N116	2715-24827-T116	2715-24827-PH116
		.248	.027	.562	.031	.058		2644-24827-N116	2644-24827-T116	2644-24827-PH116
		.248	.027	.562	.062	.089		2717-24827-N116	2717-24827-T116	2717-24827-PH116
		.248	.027	.625	.031	.058		2646-24827-N116	2646-24827-T116	2646-24827-PH116
		.248	.027	.625	.062	.089		2718-24827-N116	2718-24827-T116	2718-24827-PH116
		.248	.050	.343	.031	.081		2636-24850-N116	2636-24850-T116	2636-24850-PH116
		.248	.050	.343	.062	.112		2709-24850-N116	2709-24850-T116	2709-24850-PH116
		.248	.050	.375	.031	.081		2638-24850-N116	2638-24850-T116	2638-24850-PH116
		.248	.050	.375	.062	.112		2711-24850-N116	2711-24850-T116	2711-24850-PH116
		.248	.050	.437	.031	.081		2640-24850-N116	2640-24850-T116	2640-24850-PH116
		.248	.050	.437	.062	.112		2713-24850-N116	2713-24850-T116	2713-24850-PH116
		.248	.050	.468	.031	.081		2641-24850-N116	2641-24850-T116	2641-24850-PH116
		.248	.050	.468	.062	.112		2714-24850-N116	2714-24850-T116	2714-24850-PH116
		.248	.050	.500	.031	.081		2642-24850-N116	2642-24850-T116	2642-24850-PH116
		.248	.050	.500	.062	.112		2715-24850-N116	2715-24850-T116	2715-24850-PH116

Continued next page

5 Pasco Hill Road • Cromwell, CT 06416-1093
Phone: 860-828-0847 • Call Toll Free: 800-243-6032 • Fax: 860-828-0381
Web Address: http://www.amatom.com • E-Mail: sales@amatom.com

INSULATING SHOULDER WASHERS

SCREW CLEARANCE NO. 4

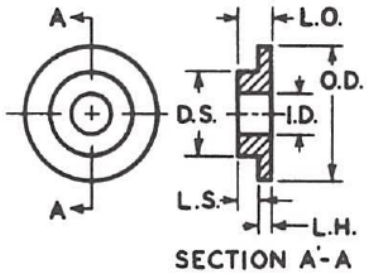

SECTION A-A

TOLERANCES			
I. D.	+.010, -.000	L. H.	±.005
D. S.	+.000, -.010	L. O.	±.005 for .047 - .065 Thick.
L. S.	REF.		±.008 for .075 - .094 Thick.
O. D.	+.015, -.005		±.010 for .095 Thick. & over

Continued from previous page

SCREW SIZE	I. D.	D. S.	L. S.	O. D.	L. H.	L. O.	MATERIAL	NYLON (N)	TEFLON (T)	PHENOLIC (PH)
4 (.112)	.116	.248	.050	.562	.031	.081		2644-24850-N116	2644-24850-T116	2644-24850-PH116
		.248	.050	.562	.062	.112		2717-24850-N116	2717-24850-T116	2717-24850-PH116
		.248	.050	.625	.031	.081		2646-24850-N116	2646-24850-T116	2646-24850-PH116
		.248	.050	.625	.062	.112		2718-24850-N116	2718-24850-T116	2718-24850-PH116
		.279	.027	.375	.031	.058		2638-27927-N116	2638-27927-T116	2638-27927-PH116
		.279	.027	.375	.062	.089		2711-27927-N116	2711-27927-T116	2711-27927-PH116
		.279	.027	.437	.031	.058		2640-27927-N116	2640-27927-T116	2640-27927-PH116
		.279	.027	.437	.062	.089		2713-27927-N116	2713-27927-T116	2713-27927-PH116
		.279	.027	.468	.031	.058		2641-27927-N116	2641-27927-T116	2641-27927-PH116
		.279	.027	.468	.062	.089		2714-27927-N116	2714-27927-T116	2714-27927-PH116
		.279	.027	.500	.031	.058		2642-27927-N116	2642-27927-T116	2642-27927-PH116
		.279	.027	.500	.062	.089		2715-27927-N116	2715-27927-T116	2715-27927-PH116
		.279	.027	.562	.031	.058		2644-27927-N116	2644-27927-T116	2644-27927-PH116
		.279	.027	.562	.062	.089		2717-27927-N116	2717-27927-T116	2717-27927-PH116
		.279	.027	.625	.031	.058		2646-27927-N116	2646-27927-T116	2646-27927-PH116
		.279	.027	.625	.062	.089		2718-27927-N116	2718-27927-T116	2718-27927-PH116
		.279	.050	.375	.031	.081		2638-27950-N116	2638-27950-T116	2638-27950-PH116
		.279	.050	.375	.062	.112		2711-27950-N116	2711-27950-T116	2711-27950-PH116
		.279	.050	.437	.031	.081		2640-27950-N116	2640-27950-T116	2640-27950-PH116
		.279	.050	.437	.062	.112		2713-27950-N116	2713-27950-T116	2713-27950-PH116
		.279	.050	.468	.031	.081		2641-27950-N116	2641-27950-T116	2641-27950-PH116
		.279	.050	.468	.062	.112		2714-27950-N116	2714-27950-T116	2714-27950-PH116
		.279	.050	.500	.031	.081		2642-27950-N116	2642-27950-T116	2642-27950-PH116
		.279	.050	.500	.062	.112		2715-27950-N116	2715-27950-T116	2715-27950-PH116
		.279	.050	.562	.031	.081		2644-27950-N116	2644-27950-T116	2644-27950-PH116
		.279	.050	.562	.062	.112		2717-27950-N116	2717-27950-T116	2717-27950-PH116
		.279	.050	.625	.031	.081		2646-27950-N116	2646-27950-T116	2646-27950-PH116
		.279	.050	.625	.062	.112		2718-27950-N116	2718-27950-T116	2718-27950-PH116
		.310	.027	.437	.031	.058		2640-31027-N116	2640-31027-T116	2640-31027-PH116
		.310	.027	.437	.062	.089		2713-31027-N116	2713-31027-T116	2713-31027-PH116
		.310	.027	.468	.031	.058		2641-31027-N116	2641-31027-T116	2641-31027-PH116
		.310	.027	.468	.062	.089		2714-31027-N116	2714-31027-T116	2714-31027-PH116
		.310	.027	.500	.031	.058		2642-31027-N116	2642-31027-T116	2642-31027-PH116
		.310	.027	.500	.062	.089		2715-31027-N116	2715-31027-T116	2715-31027-PH116
		.310	.027	.562	.031	.058		2644-31027-N116	2644-31027-T116	2644-31027-PH116
		.310	.027	.562	.062	.089		2717-31027-N116	2717-31027-T116	2717-31027-PH116
		.310	.027	.625	.031	.058		2646-31027-N116	2646-31027-T116	2646-31027-PH116
		.310	.027	.625	.062	.089		2718-31027-N116	2718-31027-T116	2718-31027-PH116
		.310	.050	.437	.031	.081		2640-31050-N116	2640-31050-T116	2640-31050-PH116

Continued next page

5 Pasco Hill Road • Cromwell, CT 06416-1093
Phone: 860-828-0847 • Call Toll Free: 800-243-6032 • Fax: 860-828-0381
Web Address: http://www.amatom.com • E-Mail: sales@amatom.com

INSULATING SHOULDER WASHERS

SCREW CLEARANCE NO. 4

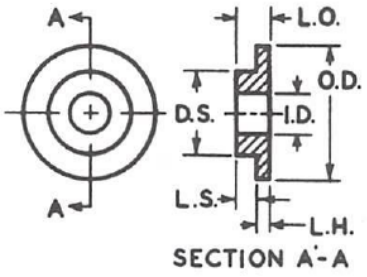

SECTION A-A

TOLERANCES			
I. D.	+.010, -.000	L. H.	±.005
D. S.	+.000, -.010	L. O.	±.005 for .047 - .065 Thick.
L. S.	REF.		±.008 for .075 - .094 Thick.
O. D.	+.015, -.005		±.010 for .095 Thick. & over

Continued from previous page

SCREW SIZE	I. D.	D. S.	L. S.	O. D.	L. H.	L. O.	MATERIAL			
								NYLON (N)	TEFLON (T)	PHENOLIC (PH)
4 (.112)	.116	.310	.050	.437	.062	.112		2713-31050-N116	2713-31050-T116	2713-31050-PH116
		.310	.050	.468	.031	.081		2641-31050-N116	2641-31050-T116	2641-31050-PH116
		.310	.050	.468	.062	.112		2714-31050-N116	2714-31050-T116	2714-31050-PH116
		.310	.050	.500	.031	.081		2642-31050-N116	2642-31050-T116	2642-31050-PH116
		.310	.050	.500	.062	.112		2715-31050-N116	2715-31050-T116	2715-31050-PH116
		.310	.050	.562	.031	.081		2644-31050-N116	2644-31050-T116	2644-31050-PH116
		.310	.050	.562	.062	.112		2717-31050-N116	2717-31050-T116	2717-31050-PH116
		.310	.050	.625	.031	.081		2646-31050-N116	2646-31050-T116	2646-31050-PH116
		.310	.050	.625	.062	.112		2718-31050-N116	2718-31050-T116	2718-31050-PH116
	.118	.177	.015	.281	.031	.046		2632-17715-N118	2632-17715-T118	2632-17715-PH118
	.120	.180	.031	.312	.062	.093		2707-18031-N120	2707-18031-T120	2707-18031-PH120
		.190	.022	.375	.040	.062		2666-19022-N120	2666-19022-T120	2666-19022-PH120
		.190	.045	.312	.045	.090		2678-19045-N120	2678-19045-T120	2678-19045-PH120
		.191	.027	.250	.032	.059		2630-19127-N120	2630-19127-T120	2630-19127-PH120
		.214	.031	.312	.031	.062		2634-21431-N120	2634-21431-T120	2634-21431-PH120

5 Pasco Hill Road • Cromwell, CT 06416-1093
Phone: 860-828-0847 • Call Toll Free: 800-243-6032 • Fax: 860-828-0381
Web Address: http://www.amatom.com • E-Mail: sales@amatom.com

INSULATING SHOULDER WASHERS

SCREW CLEARANCE NO. 5

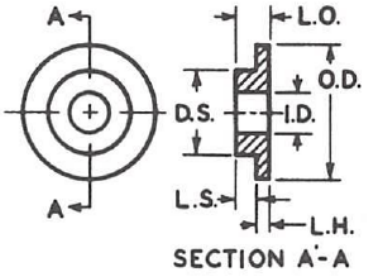

SECTION A-A

TOLERANCES			
I. D.	+.010, -.000	L. H.	±.005
D. S.	+.000, -.010	L. O.	±.005 for .047 - .065 Thick.
L. S.	REF.		±.008 for .075 - .094 Thick.
O. D.	+.015, -.005		±.010 for .095 Thick. & over

SCREW SIZE	I. D.	D. S.	L. S.	O. D.	L. H.	L. O.	MATERIAL			
								NYLON (N)	TEFLON (T)	PHENOLIC (PH)
5 (.125)	.126	.170	.020	.250	.020	.040		2580-17020-N126	2580-17020-T126	**2580-17020-PH126
		.171	.031	.437	.062	.093		2713-17131-N126	2713-17131-T126	2713-17131-PH126
		.175	.025	.312	.062	.087		2707-17525-N126	2707-17525-T126	2707-17525-PH126
		.185	.027	.250	.031	.058		2630-18527-N126	2630-18527-T126	2630-18527-PH126
		.185	.027	.250	.062	.089		2704-18527-N126	2704-18527-T126	2704-18527-PH126
		.185	.027	.312	.031	.058		2634-18527-N126	2634-18527-T126	2634-18527-PH126
		.185	.027	.312	.062	.089		2707-18527-N126	2707-18527-T126	2707-18527-PH126
		.185	.027	.375	.031	.058		2638-18527-N126	2638-18527-T126	2638-18527-PH126
		.185	.027	.375	.062	.089		2711-18527-N126	2711-18527-T126	2711-18527-PH126
		.185	.027	.437	.031	.058		2640-18527-N126	2640-18527-T126	2640-18527-PH126
		.185	.027	.437	.062	.089		2713-18527-N126	2713-18527-T126	2713-18527-PH126
		.185	.047	.312	.047	.094		2678-18547-N126	2678-18547-T126	2678-18547-PH126
		.185	.050	.250	.031	.081		2630-18550-N126	2630-18550-T126	2630-18550-PH126
		.185	.050	.250	.062	.112		2704-18550-N126	2704-18550-T126	2704-18550-PH126
		.185	.050	.312	.031	.081		2634-18550-N126	2634-18550-T126	2634-18550-PH126
		.185	.050	.312	.062	.112		2707-18550-N126	2707-18550-T126	2707-18550-PH126
		.185	.050	.375	.031	.081		2638-18550-N126	2638-18550-T126	2638-18550-PH126
		.185	.050	.375	.062	.112		2711-18550-N126	2711-18550-T126	2711-18550-PH126
		.185	.050	.437	.031	.081		2640-18550-N126	2640-18550-T126	2640-18550-PH126
		.185	.050	.437	.062	.112		2713-18550-N126	2713-18550-T126	2713-18550-PH126
		.187	.031	.375	.047	.078		2680-18731-N126	2680-18731-T126	2680-18731-PH126
		.188	.020	.312	.094	.114		2737-18820-N126	2737-18820-T126	2737-18820-PH126
		.188	.031	.313	.063	.094		2707-18831-N126	2707-18831-T126	2707-18831-PH126
		.190	.040	.312	.045	.085		2678-19040-N126	2678-19040-T126	2678-19040-PH126
		.190	.040	.375	.040	.080		2666-19040-N126	2666-19040-T126	2666-19040-PH126
		.199	.093	.245	.063	.156		2704-19993-N126	2704-19993-T126	2704-19993-PH126
		.216	.027	.312	.031	.058		2634-21627-N126	2634-21627-T126	2634-21627-PH126
		.216	.027	.312	.062	.089		2707-21627-N126	2707-21627-T126	2707-21627-PH126
		.216	.027	.375	.031	.058		2638-21627-N126	2638-21627-T126	2638-21627-PH126
		.216	.027	.375	.062	.089		2711-21627-N126	2711-21627-T126	2711-21627-PH126
		.216	.027	.437	.031	.058		2640-21627-N126	2640-21627-T126	2640-21627-PH126
		.216	.027	.437	.062	.089		2713-21627-N126	2713-21627-T126	2713-21627-PH126
		.216	.027	.468	.031	.058		2641-21627-N126	2641-21627-T126	2641-21627-PH126
		.216	.027	.468	.062	.089		2714-21627-N126	2714-21627-T126	2714-21627-PH126
		.216	.050	.312	.031	.081		2634-21650-N126	2634-21650-T126	2634-21650-PH126

Continued next page

INSULATING SHOULDER WASHERS

SCREW CLEARANCE NO. 5

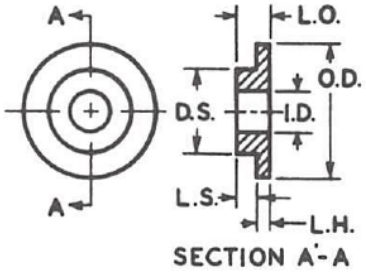

SECTION A-A

TOLERANCES			
I. D.	+.010, -.000	L. H.	±.005
D. S.	+.000, -.010	L. O.	±.005 for .047 - .065 Thick.
L. S.	REF.		±.008 for .075 - .094 Thick.
O. D.	+.015, -.005		±.010 for .095 Thick. & over

Continued from previous page

SCREW SIZE	I. D.	D. S.	L. S.	O. D.	L. H.	L. O.	MATERIAL			
								NYLON (N)	TEFLON (T)	PHENOLIC (PH)
5 (.125)	.126	.216	.050	.312	.062	.112		2707-21650-N126	2707-21650-T126	2707-21650-PH126
		.216	.050	.375	.031	.081		2638-21650-N126	2638-21650-T126	2638-21650-PH126
		.216	.050	.375	.062	.112		2711-21650-N126	2711-21650-T126	2711-21650-PH126
		.216	.050	.437	.031	.081		2640-21650-N126	2640-21650-T126	2640-21650-PH126
		.216	.050	.437	.062	.112		2713-21650-N126	2713-21650-T126	2713-21650-PH126
		.216	.050	.468	.031	.081		2641-21650-N126	2641-21650-T126	2641-21650-PH126
		.216	.050	.468	.062	.112		2714-21650-N126	2714-21650-T126	2714-21650-PH126
		.218	.012	.343	.050	.062		2692-21812-N126	2692-21812-T126	2692-21812-PH126
		.219	.047	.438	.047	.094		2681-21947-N126	2681-21947-T126	2681-21947-PH126
		.225	.020	.312	.042	.062		2662-22520-N126	2662-22520-T126	2662-22520-PH126
		.248	.027	.343	.031	.058		2636-24827-N126	2636-24827-T126	2636-24827-PH126
		.248	.027	.343	.062	.089		2709-24827-N126	2709-24827-T126	2709-24827-PH126
		.248	.027	.375	.031	.058		2638-24827-N126	2638-24827-T126	2638-24827-PH126
		.248	.027	.375	.062	.089		2711-24827-N126	2711-24827-T126	2711-24827-PH126
		.248	.027	.437	.031	.058		2640-24827-N126	2640-24827-T126	2640-24827-PH126

NOTE: ** Not available machined in Phenolic with L.H. thinner than .031. Can be molded if required. Special order only.

Continued next page

5 Pasco Hill Road • Cromwell, CT 06416-1093
Phone: 860-828-0847 • Call Toll Free: 800-243-6032 • Fax: 860-828-0381
Web Address: http://www.amatom.com • E-Mail: sales@amatom.com

INSULATING SHOULDER WASHERS

SCREW CLEARANCE NO. 5

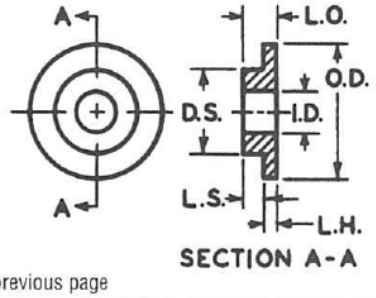

SECTION A-A

TOLERANCES			
I. D.	+.010, -.000	L. H.	±.005
D. S.	+.000, -.010	L. O.	±.005 for .047 - .065 Thick.
L. S.	REF.		±.008 for .075 - .094 Thick.
O. D.	+.015, -.005		±.010 for .095 Thick. & over

Continued from previous page

SCREW SIZE	I. D.	D. S.	L. S.	O. D.	L. H.	L. O.	MATERIAL		
							NYLON (N)	TEFLON (T)	PHENOLIC (PH)
5 (.125)	.126	.248	.027	.437	.062	.089	2713-24827-N126	2713-24827-T126	2713-24827-PH126
		.248	.027	.468	.031	.058	2641-24827-N126	2641-24827-T126	2641-24827-PH126
		.248	.027	.468	.062	.089	2714-24827-N126	2714-24827-T126	2714-24827-PH126
		.248	.027	.500	.031	.058	2642-24827-N126	2642-24827-T126	2642-24827-PH126
		.248	.027	.500	.062	.089	2715-24827-N126	2715-24827-T126	2715-24827-PH126
		.248	.027	.562	.031	.058	2644-24827-N126	2644-24827-T126	2644-24827-PH126
		.248	.027	.562	.062	.089	2717-24827-N126	2717-24827-T126	2717-24827-PH126
		.248	.027	.625	.031	.058	2646-24827-N126	2646-24827-T126	2646-24827-PH126
		.248	.027	.625	.062	.089	2718-24827-N126	2718-24827-T126	2718-24827-PH126
		.248	.050	.343	.031	.081	2636-24850-N126	2636-24850-T126	2636-24850-PH126
		.248	.050	.343	.062	.112	2709-24850-N126	2709-24850-T126	2709-24850-PH126
		.248	.050	.375	.031	.081	2638-24850-N126	2638-24850-T126	2638-24850-PH126
		.248	.050	.375	.062	.112	2711-24850-N126	2711-24850-T126	2711-24850-PH126
		.248	.050	.437	.031	.081	2640-24850-N126	2640-24850-T126	2640-24850-PH126
		.248	.050	.437	.062	.112	2713-24850-N126	2713-24850-T126	2713-24850-PH126
		.248	.050	.468	.031	.081	2641-24850-N126	2641-24850-T126	2641-24850-PH126
		.248	.050	.468	.062	.112	2714-24850-N126	2714-24850-T126	2714-24850-PH126
		.248	.050	.500	.031	.081	2642-24850-N126	2642-24850-T126	2642-24850-PH126
		.248	.050	.500	.062	.112	2715-24850-N126	2715-24850-T126	2715-24850-PH126
		.248	.050	.562	.031	.081	2644-24850-N126	2644-24850-T126	2644-24850-PH126
		.248	.050	.562	.062	.112	2717-24850-N126	2717-24850-T126	2717-24850-PH126
		.248	.050	.625	.031	.081	2646-24850-N126	2646-24850-T126	2646-24850-PH126
		.248	.050	.625	.062	.112	2718-24850-N126	2718-24850-T126	2718-24850-PH126
		.250	.030	.375	.095	.125	2739-25030-N126	2739-25030-T126	2739-25030-PH126
		.250	.035	.375	.127	.162	2758-25035-N126	2758-25035-T126	2758-25035-PH126
		.255	.040	.370	.085	.125	2727-25540-N126	2727-25540-T126	2727-25540-PH126
		.279	.027	.375	.031	.058	2638-27927-N126	2638-27927-T126	2638-27927-PH126
		.279	.027	.375	.062	.089	2711-27927-N126	2711-27927-T126	2711-27927-PH126
		.279	.027	.437	.031	.058	2640-27927-N126	2640-27927-T126	2640-27927-PH126
		.279	.027	.437	.062	.089	2713-27927-N126	2713-27927-T126	2713-27927-PH126
		.279	.027	.468	.031	.058	2641-27927-N126	2641-27927-T126	2641-27927-PH126
		.279	.027	.468	.062	.089	2714-27927-N126	2714-27927-T126	2714-27927-PH126
		.279	.027	.500	.031	.058	2642-27927-N126	2642-27927-T126	2642-27927-PH126
		.279	.027	.500	.062	.089	2715-27927-N126	2715-27927-T126	2715-27927-PH126
		.279	.027	.562	.031	.058	2644-27927-N126	2644-27927-T126	2644-27927-PH126
		.279	.027	.562	.062	.089	2717-27927-N126	2717-27927-T126	2717-27927-PH126

Continued next page

5 Pasco Hill Road • Cromwell, CT 06416-1093
Phone: 860-828-0847 • Call Toll Free: 800-243-6032 • Fax: 860-828-0381
Web Address: http://www.amatom.com • E-Mail: sales@amatom.com

INSULATING SHOULDER WASHERS

SCREW CLEARANCE NO. 5

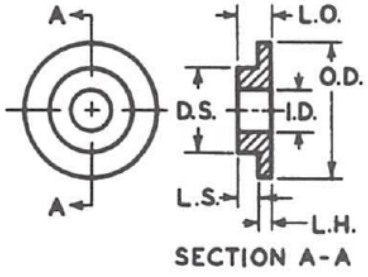

SECTION A-A

TOLERANCES			
I. D.	+.010, -.000	L. H.	±.005
D. S.	+.000, -.010	L. O.	±.005 for .047 - .065 Thick.
L. S.	REF.		±.008 for .075 - .094 Thick.
O. D.	+.015, -.005		±.010 for .095 Thick. & over

Continued from previous page

SCREW SIZE	I. D.	D. S.	L. S.	O. D.	L. H.	L. O.	MATERIAL			
								NYLON (N)	TEFLON (T)	PHENOLIC (PH)
5 (.125)	.126	.279	.027	.625	.031	.058		2646-27927-N126	2646-27927-T126	2646-27927-PH126
		.279	.027	.625	.062	.089		2718-27927-N126	2718-27927-T126	2718-27927-PH126
		.279	.050	.375	.031	.081		2638-27950-N126	2638-27950-T126	2638-27950-PH126
		.279	.050	.375	.062	.112		2711-27950-N126	2711-27950-T126	2711-27950-PH126
		.279	.050	.437	.031	.081		2640-27950-N126	2640-27950-T126	2640-27950-PH126
		.279	.050	.437	.062	.112		2713-27950-N126	2713-27950-T126	2713-27950-PH126
		.279	.050	.468	.031	.081		2641-27950-N126	2641-27950-T126	2641-27950-PH126
		.279	.050	.468	.062	.112		2714-27950-N126	2714-27950-T126	2714-27950-PH126
		.279	.050	.500	.031	.081		2642-27950-N126	2642-27950-T126	2642-27950-PH126
		.279	.050	.500	.062	.112		2715-27950-N126	2715-27950-T126	2715-27950-PH126
		.279	.050	.562	.031	.081		2644-27950-N126	2644-27950-T126	2644-27950-PH126
		.279	.050	.562	.062	.112		2717-27950-N126	2717-27950-T126	2717-27950-PH126
		.279	.050	.625	.031	.081		2646-27950-N126	2646-27950-T126	2646-27950-PH126
		.279	.050	.625	.062	.112		2718-27950-N126	2718-27950-T126	2718-27950-PH126
		.310	.027	.437	.031	.058		2640-31027-N126	2640-31027-T126	2640-31027-PH126

Continued next page

INSULATING SHOULDER WASHERS

SCREW CLEARANCE NO. 5

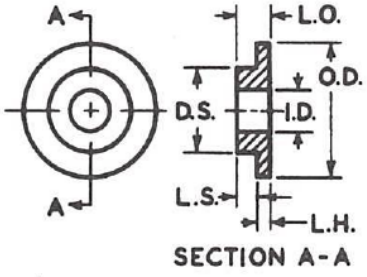

SECTION A-A

TOLERANCES			
I. D.	+.010, -.000	L. H.	±.005
D. S.	+.000, -.010	L. O.	±.005 for .047 - .065 Thick.
L. S.	REF.		±.008 for .075 - .094 Thick.
O. D.	+.015, -.005		±.010 for .095 Thick. & over

Continued from previous page

SCREW SIZE	I. D.	D. S.	L. S.	O. D.	L. H.	L. O.	MATERIAL: NYLON (N)	MATERIAL: TEFLON (T)	MATERIAL: PHENOLIC (PH)
5	.126	.310	.027	.437	.062	.089	2713-31027-N126	2713-31027-T126	2713-31027-PH126
(.125)		.310	.027	.468	.031	.058	2641-31027-N126	2641-31027-T126	2641-31027-PH126
		.310	.027	.468	.062	.089	2714-31027-N126	2714-31027-T126	2714-31027-PH126
		.310	.027	.500	.031	.058	2642-31027-N126	2642-31027-T126	2642-31027-PH126
		.310	.027	.500	.062	.089	2715-31027-N126	2715-31027-T126	2715-31027-PH126
		.310	.027	.562	.031	.058	2644-31027-N126	2644-31027-T126	2644-31027-PH126
		.310	.027	.562	.062	.089	2717-31027-N126	2717-31027-T126	2717-31027-PH126
		.310	.027	.625	.031	.058	2646-31027-N126	2646-31027-T126	2646-31027-PH126
		.310	.027	.625	.062	.089	2718-31027-N126	2718-31027-T126	2718-31027-PH126
		.310	.050	.437	.031	.081	2640-31050-N126	2640-31050-T126	2640-31050-PH126
		.310	.050	.437	.062	.112	2713-31050-N126	2713-31050-T126	2713-31050-PH126
		.310	.050	.468	.031	.081	2641-31050-N126	2641-31050-T126	2641-31050-PH126
		.310	.050	.468	.062	.112	2714-31050-N126	2714-31050-T126	2714-31050-PH126
		.310	.050	.500	.031	.081	2642-31050-N126	2642-31050-T126	2642-31050-PH126
		.310	.050	.500	.062	.112	2715-31050-N126	2715-31050-T126	2715-31050-PH126
		.310	.050	.562	.031	.081	2644-31050-N126	2644-31050-T126	2644-31050-PH126
		.310	.050	.562	.062	.112	2717-31050-N126	2717-31050-T126	2717-31050-PH126
		.310	.050	.625	.031	.081	2646-31050-N126	2646-31050-T126	2646-31050-PH126
		.310	.050	.625	.062	.112	2718-31050-N126	2718-31050-T126	2718-31050-PH126
		.312	.050	.375	.050	.100	2693-31250-N126	2693-31250-T126	2693-31250-PH126
	.128	.185	.020	.375	.031	.051	2638-18520-N128	2638-18520-T128	2638-18520-PH128
		.185	.024	.312	.050	.074	2691-18524-N128	2691-18524-T128	2691-18524-PH128
		.185	.024	.378	.050	.074	2693-18524-N128	2693-18524-T128	2693-18524-PH128
		.185	.028	.345	.062	.090	2709-18528-N128	2709-18528-T128	2709-18528-PH128
		.185	.062	.312	.031	.093	2634-18562-N128	2634-18562-T128	2634-18562-PH128
		.185	.078	.312	.031	.109	2634-18578-N128	2634-18578-T128	2634-18578-PH128
		.187	.100	.312	.047	.147	2678-187100-N128	2678-187100-T128	2678-187100-PH128
		.193	.055	.281	.062	.117	2705-19355-N128	2705-19355-T128	2705-19355-PH128
		.215	.020	.437	.053	.073	2694-21520-N128	2694-21520-T128	2694-21520-PH128
		.218	.062	.312	.031	.093	2634-21862-N128	2634-21862-T128	2634-21862-PH128
		.265	.085	.320	.040	.125	2663-26585-N128	2663-26585-T128	2663-26585-PH128
	.130	.175	.053	.228	.078	.131	2726-17553-N130	2726-17553-T130	2726-17553-PH130
		.187	.085	.335	.040	.125	2663-18785-N130	2663-18785-T130	2663-18785-PH130
		.190	.031	.343	.031	.062	2636-19031-N130	2636-19031-T130	2636-19031-PH130
		.192	.044	.437	.031	.075	2640-19244-N130	2640-19244-T130	2640-19244-PH130
		.223	.022	.308	.038	.060	2662-22322-N130	2662-22322-T130	2662-22322-PH130
		.250	.045	.375	.062	.107	2711-25045-N130	2711-25045-T130	2711-25045-PH130

Continued next page

5 Pasco Hill Road • Cromwell, CT 06416-1093
Phone: 860-828-0847 • Call Toll Free: 800-243-6032 • Fax: 860-828-0381
Web Address: http://www.amatom.com • E-Mail: sales@amatom.com

INSULATING SHOULDER WASHERS

SCREW CLEARANCE NO. 5

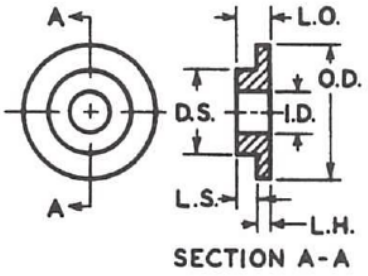

SECTION A-A

TOLERANCES			
I. D.	+.010, -.000	L. H.	±.005
D. S.	+.000, -.010	L. O.	±.005 for .047 - .065 Thick.
L. S.	REF.		±.008 for .075 - .094 Thick.
O. D.	+.015, -.005		±.010 for .095 Thick. & over

Continued from previous page

SCREW SIZE	I. D.	D. S.	L. S.	O. D.	L. H.	L. O.	MATERIAL	NYLON (N)	TEFLON (T)	PHENOLIC (PH)
5 (.125)	.130	.206	.020	.343	.024	.044		2611-20620-N132	2611-20620-T132	**2611-20620-PH132
	.132	.242	.080	.355	.060	.140		2710-24280-N132	2710-24280-T132	2710-24280-PH132
	↓	.219	.118	.343	.062	.180		2709-219118-N133	2709-219118-T133	2709-219118-PH133
	.133	.187	.010	.328	.063	.073		2708-18710-N135	2708-18710-T135	2708-18710-PH135
	.135	.187	.015	.312	.031	.046		2634-18715-N135	2634-18715-T135	2634-18715-PH135
	↓	.187	.015	.437	.062	.077		2713-18715-N135	2713-18715-T135	2713-18715-PH135
		.187	.035	.328	.062	.097		2708-18735-N135	2708-18735-T135	2708-18735-PH135
		.226	.040	.343	.062	.102		2709-22640-N135	2709-22640-T135	2709-22640-PH135
		.185	.024	.312	.050	.074		2691-18524-N136	2691-18524-T136	2691-18524-PH136
	.136	.187	.032	.250	.032	.064		2630-18732-N136	2630-18732-T136	2630-18732-PH136
	↓	.187	.032	.250	.063	.095		2704-18732-N136	2704-18732-T136	2704-18732-PH136
		.187	.032	.312	.062	.094		2707-18732-N136	2707-18732-T136	2707-18732-PH136
		.198	.046	.312	.062	.108		2707-19846-N136	2707-19846-T136	2707-19846-PH136
		.245	.078	.375	.062	.140		2711-24578-N136	2711-24578-T136	2711-24578-PH136
		.437	.031	.562	.031	.062		2644-43731-N136	2644-43731-T136	2644-43731-PH136

NOTE: ** Not available machined in Phenolic with L.H. thinner than .031. Can be molded if required. Special order only.

5 Pasco Hill Road • Cromwell, CT 06416-1093
Phone: 860-828-0847 • Call Toll Free: 800-243-6032 • Fax: 860-828-0381
Web Address: http://www.amatom.com • E-Mail: sales@amatom.com

INSULATING SHOULDER WASHERS

SCREW CLEARANCE NO. 6

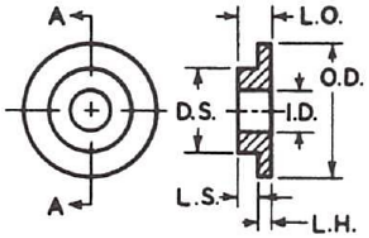

SECTION A-A

TOLERANCES			
I. D.	+.010, -.000	L. H.	±.005
D. S.	+.000, -.010	L. O.	±.005 for .047 - .065 Thick.
L. S.	REF.		±.008 for .075 - .094 Thick.
O. D.	+.015, -.005		±.010 for .095 Thick. & over

SCREW SIZE	I. D.	D. S.	L. S.	O. D.	L. H.	L. O.	MATERIAL			
								NYLON (N)	TEFLON (T)	PHENOLIC (PH)
6 (.138)	.140	.180	.031	.312	.031	.062		2634-18031-N140	2634-18031-T140	2634-18031-PH140
		.185	.027	.250	.031	.058		2630-18527-N140	2630-18527-T140	2630-18527-PH140
		.185	.027	.250	.062	.089		2704-18527-N140	2704-18527-T140	2704-18527-PH140
		.185	.027	.312	.031	.058		2634-18527-N140	2634-18527-T140	2634-18527-PH140
		.185	.027	.312	.062	.089		2707-18527-N140	2707-18527-T140	2707-18527-PH140
		.185	.027	.343	.031	.058		2636-18527-N140	2636-18527-T140	2636-18527-PH140
		.185	.027	.343	.062	.089		2709-18527-N140	2709-18527-T140	2709-18527-PH140
		.185	.027	.375	.031	.058		2638-18527-N140	2638-18527-T140	2638-18527-PH140
		.185	.027	.375	.062	.089		2711-18527-N140	2711-18527-T140	2711-18527-PH140
		.185	.027	.437	.031	.058		2640-18527-N140	2640-18527-T140	2640-18527-PH140
		.185	.027	.437	.062	.089		2713-18527-N140	2713-18527-T140	2713-18527-PH140
		.185	.027	.468	.031	.058		2641-18527-N140	2641-18527-T140	2641-18527-PH140
		.185	.027	.468	.062	.089		2714-18527-N140	2714-18527-T140	2714-18527-PH140
		.185	.027	.500	.031	.058		2642-18527-N140	2642-18527-T140	2642-18527-PH140
		.185	.027	.500	.062	.089		2715-18527-N140	2715-18527-T140	2715-18527-PH140
		.185	.027	.562	.031	.058		2644-18527-N140	2644-18527-T140	2644-18527-PH140
		.185	.027	.562	.062	.089		2717-18527-N140	2717-18527-T140	2717-18527-PH140
		.185	.027	.625	.031	.058		2646-18527-N140	2646-18527-T140	2646-18527-PH140
		.185	.027	.625	.062	.089		2718-18527-N140	2718-18527-T140	2718-18527-PH140
		.185	.035	.375	.045	.080		2680-18535-N140	2680-18535-T140	2680-18535-PH140
		.185	.040	.312	.060	.100		2707-18540-N140	2707-18540-T140	2707-18540-PH140
		.185	.050	.250	.031	.081		2630-18550-N140	2630-18550-T140	2630-18550-PH140
		.185	.050	.250	.062	.112		2704-18550-N140	2704-18550-T140	2704-18550-PH140
		.185	.050	.312	.031	.081		2634-18550-N140	2634-18550-T140	2634-18550-PH140
		.185	.050	.312	.062	.112		2707-18550-N140	2707-18550-T140	2707-18550-PH140
		.185	.050	.343	.031	.081		2636-18550-N140	2636-18550-T140	2636-18550-PH140
		.185	.050	.343	.062	.112		2709-18550-N140	2709-18550-T140	2709-18550-PH140
		.185	.050	.375	.031	.081		2638-18550-N140	2638-18550-T140	2638-18550-PH140
		.185	.050	.375	.062	.112		2711-18550-N140	2711-18550-T140	2711-18550-PH140
		.185	.050	.437	.031	.081		2640-18550-N140	2640-18550-T140	2640-18550-PH140
		.185	.050	.437	.062	.112		2713-18550-N140	2713-18550-T140	2713-18550-PH140
		.185	.050	.468	.031	.081		2641-18550-N140	2641-18550-T140	2641-18550-PH140
		.185	.050	.468	.062	.112		2714-18550-N140	2714-18550-T140	2714-18550-PH140
		.185	.050	.500	.031	.081		2642-18550-N140	2642-18550-T140	2642-18550-PH140
		.185	.050	.500	.062	.112		2715-18550-N140	2715-18550-T140	2715-18550-PH140
		.185	.050	.562	.031	.081		2644-18550-N140	2644-18550-T140	2644-18550-PH140

Continued next page

5 Pasco Hill Road • Cromwell, CT 06416-1093
Phone: 860-828-0847 • Call Toll Free: 800-243-6032 • Fax: 860-828-0381
Web Address: http://www.amatom.com • E-Mail: sales@amatom.com

INSULATING SHOULDER WASHERS

SCREW CLEARANCE NO. 6

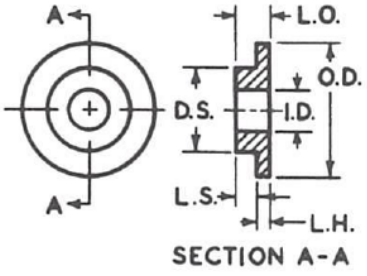

SECTION A-A

TOLERANCES			
I. D.	+.010, -.000	L. H.	±.005
D. S.	+.000, -.010	L. O.	±.005 for .047 - .065 Thick.
L. S.	REF.		±.008 for .075 - .094 Thick.
O. D.	+.015, -.005		±.010 for .095 Thick. & over

Continued from previous page

SCREW SIZE	I. D.	D. S.	L. S.	O. D.	L. H.	L. O.	MATERIAL			
								NYLON (N)	TEFLON (T)	PHENOLIC (PH)
6 (.138)	.140	.185	.050	.562	.062	.112		2717-18550-N140	2717-18550-T140	2717-18550-PH140
		.185	.050	.625	.031	.081		2646-18550-N140	2646-18550-T140	2646-18550-PH140
		.185	.050	.625	.062	.112		2718-18550-N140	2718-18550-T140	2718-18550-PH140
		.187	.016	.313	.031	.047		2634-18716-N140	2634-18716-T140	2634-18716-PH140
		.187	.032	.250	.032	.064		2630-18732-N140	2630-18732-T140	2630-18732-PH140
		.187	.032	.250	.063	.095		2704-18732-N140	2704-18732-T140	2704-18732-PH140
		.187	.032	.312	.062	.094		2707-18732-N140	2707-18732-T140	2707-18732-PH140
		.187	.039	.313	.023	.062		2584-18739-N140	2584-18739-T140	**2584-18739-PH140
		.187	.086	.328	.064	.150		2708-18786-N140	2708-18786-T140	2708-18786-PH140
		.198	.031	.312	.031	.062		2634-19831-N140	2634-19831-T140	2634-19831-PH140
		.210	.035	.312	.055	.090		2691-21035-N140	2691-21035-T140	2691-21035-PH140
		.215	.047	.437	.047	.094		2681-21547-N140	2681-21547-T140	2681-21547-PH140

NOTE: ** Not available machined in Phenolic with L.H. thinner than .031. Can be molded if required. Special order only.

Continued next page

5 Pasco Hill Road • Cromwell, CT 06416-1093
Phone: 860-828-0847 • Call Toll Free: 800-243-6032 • Fax: 860-828-0381
Web Address: http://www.amatom.com • E-Mail: sales@amatom.com

INSULATING SHOULDER WASHERS

SCREW CLEARANCE NO. 6

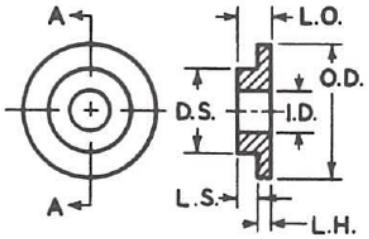

SECTION A-A

TOLERANCES			
I. D.	+.010, -.000	L. H.	±.005
D. S.	+.000, -.010	L. O.	±.005 for .047 - .065 Thick.
L. S.	REF.		±.008 for .075 - .094 Thick.
O. D.	+.015, -.005		±.010 for .095 Thick. & over

Continued from previous page

SCREW SIZE	I. D.	D. S.	L. S.	O. D.	L. H.	L. O.	MATERIAL	NYLON (N)	TEFLON (T)	PHENOLIC (PH)
6 (.138)	.140	.216	.027	.312	.031	.058		2634-21627-N140	2634-21627-T140	2634-21627-PH140
		.216	.027	.312	.062	.089		2707-21627-N140	2707-21627-T140	2707-21627-PH140
		.216	.027	.343	.031	.058		2636-21627-N140	2636-21627-T140	2636-21627-PH140
		.216	.027	.343	.062	.089		2709-21627-N140	2709-21627-T140	2709-21627-PH140
		.216	.027	.375	.031	.058		2638-21627-N140	2638-21627-T140	2638-21627-PH140
		.216	.027	.375	.062	.089		2711-21627-N140	2711-21627-T140	2711-21627-PH140
		.216	.027	.437	.031	.058		2640-21627-N140	2640-21627-T140	2640-21627-PH140
		.216	.027	.437	.062	.089		2713-21627-N140	2713-21627-T140	2713-21627-PH140
		.216	.027	.468	.031	.058		2641-21627-N140	2641-21627-T140	2641-21627-PH140
		.216	.027	.468	.062	.089		2714-21627-N140	2714-21627-T140	2714-21627-PH140
		.216	.027	.500	.031	.058		2642-21627-N140	2642-21627-T140	2642-21627-PH140
		.216	.027	.500	.062	.089		2715-21627-N140	2715-21627-T140	2715-21627-PH140
		.216	.027	.562	.031	.058		2644-21627-N140	2644-21627-T140	2644-21627-PH140
		.216	.027	.562	.062	.089		2717-21627-N140	2717-21627-T140	2717-21627-PH140
		.216	.027	.625	.031	.058		2646-21627-N140	2646-21627-T140	2646-21627-PH140
		.216	.027	.625	.062	.089		2718-21627-N140	2718-21627-T140	2718-21627-PH140
		.216	.050	.312	.031	.081		2634-21650-N140	2634-21650-T140	2634-21650-PH140
		.216	.050	.312	.062	.112		2707-21650-N140	2707-21650-T140	2707-21650-PH140
		.216	.050	.343	.031	.081		2636-21650-N140	2636-21650-T140	2636-21650-PH140
		.216	.050	.343	.062	.112		2709-21650-N140	2709-21650-T140	2709-21650-PH140
		.216	.050	.375	.031	.081		2638-21650-N140	2638-21650-T140	2638-21650-PH140
		.216	.050	.375	.062	.112		2711-21650-N140	2711-21650-T140	2711-21650-PH140
		.216	.050	.437	.031	.081		2640-21650-N140	2640-21650-T140	2640-21650-PH140
		.216	.050	.437	.062	.112		2713-21650-N140	2713-21650-T140	2713-21650-PH140
		.216	.050	.468	.031	.081		2641-21650-N140	2641-21650-T140	2641-21650-PH140
		.216	.050	.468	.062	.112		2714-21650-N140	2714-21650-T140	2714-21650-PH140
		.216	.050	.500	.031	.081		2642-21650-N140	2642-21650-T140	2642-21650-PH140
		.216	.050	.500	.062	.112		2715-21650-N140	2715-21650-T140	2715-21650-PH140
		.216	.050	.562	.031	.081		2644-21650-N140	2644-21650-T140	2644-21650-PH140
		.216	.050	.562	.062	.112		2717-21650-N140	2717-21650-T140	2717-21650-PH140
		.216	.050	.625	.031	.081		2646-21650-N140	2646-21650-T140	2646-21650-PH140
		.216	.050	.625	.062	.112		2718-21650-N140	2718-21650-T140	2718-21650-PH140
		.218	.047	.375	.062	.109		2711-21847-N140	2711-21847-T140	2711-21847-PH140
		.221	.016	.343	.062	.078		2709-22116-N140	2709-22116-T140	2709-22116-PH140
		.248	.027	.343	.031	.058		2636-24827-N140	2636-24827-T140	2636-24827-PH140
		.248	.027	.343	.062	.089		2709-24827-N140	2709-24827-T140	2709-24827-PH140

Continued next page

5 Pasco Hill Road • Cromwell, CT 06416-1093
Phone: 860-828-0847 • Call Toll Free: 800-243-6032 • Fax: 860-828-0381
Web Address: http://www.amatom.com • E-Mail: sales@amatom.com

AMATOM®

INSULATING SHOULDER WASHERS

SCREW CLEARANCE NO. 6

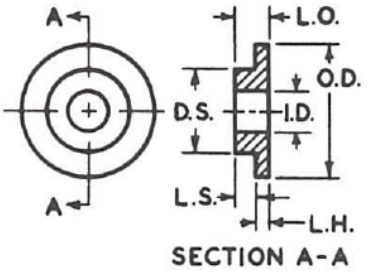

SECTION A-A

TOLERANCES			
I. D.	+.010, -.000	L. H.	±.005
D. S.	+.000, -.010	L. O.	±.005 for .047 - .065 Thick.
L. S.	REF.		±.008 for .075 - .094 Thick.
O. D.	+.015, -.005		±.010 for .095 Thick. & over

Continued from previous page

SCREW SIZE	I. D.	D. S.	L. S.	O. D.	L. H.	L. O.	MATERIAL	NYLON (N)	TEFLON (T)	PHENOLIC (PH)
6 (.138)	.140	.248	.027	.375	.031	.058		2638-24827-N140	2638-24827-T140	2638-24827-PH140
		.248	.027	.375	.062	.089		2711-24827-N140	2711-24827-T140	2711-24827-PH140
		.248	.027	.437	.031	.058		2640-24827-N140	2640-24827-T140	2640-24827-PH140
		.248	.027	.437	.062	.089		2713-24827-N140	2713-24827-T140	2713-24827-PH140
		.248	.027	.468	.031	.058		2641-24827-N140	2641-24827-T140	2641-24827-PH140
		.248	.027	.468	.062	.089		2714-24827-N140	2714-24827-T140	2714-24827-PH140
		.248	.027	.500	.031	.058		2642-24827-N140	2642-24827-T140	2642-24827-PH140
		.248	.027	.500	.062	.089		2715-24827-N140	2715-24827-T140	2715-24827-PH140
		.248	.027	.562	.031	.058		2644-24827-N140	2644-24827-T140	2644-24827-PH140
		.248	.027	.562	.062	.089		2717-24827-N140	2717-24827-T140	2717-24827-PH140
		.248	.027	.625	.031	.058		2646-24827-N140	2646-24827-T140	2646-24827-PH140
		.248	.027	.625	.062	.089		2718-24827-N140	2718-24827-T140	2718-24827-PH140

Continued next page

5 Pasco Hill Road • Cromwell, CT 06416-1093
Phone: 860-828-0847 • Call Toll Free: 800-243-6032 • Fax: 860-828-0381
Web Address: http://www.amatom.com • E-Mail: sales@amatom.com

INSULATING SHOULDER WASHERS

SCREW CLEARANCE NO. 6

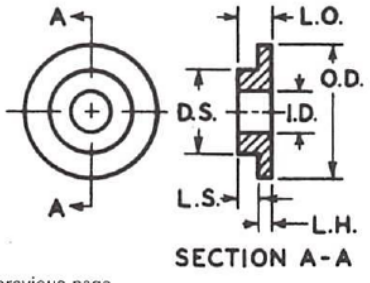

SECTION A-A

TOLERANCES			
I. D.	+.010, -.000	L. H.	±.005
D. S.	+.000, -.010	L. O.	±.005 for .047 - .065 Thick.
L. S.	REF.		±.008 for .075 - .094 Thick.
O. D.	+.015, -.005		±.010 for .095 Thick. & over

Continued from previous page

SCREW SIZE	I. D.	D. S.	L. S.	O. D.	L. H.	L. O.	MATERIAL	NYLON (N)	TEFLON (T)	PHENOLIC (PH)
6 (.138)	.140	.248	.050	.343	.031	.081		2636-24850-N140	2636-24850-T140	2636-24850-PH140
		.248	.050	.343	.062	.112		2709-24850-N140	2709-24850-T140	2709-24850-PH140
		.248	.050	.375	.031	.081		2638-24850-N140	2638-24850-T140	2638-24850-PH140
		.248	.050	.375	.062	.112		2711-24850-N140	2711-24850-T140	2711-24850-PH140
		.248	.050	.437	.031	.081		2640-24850-N140	2640-24850-T140	2640-24850-PH140
		.248	.050	.437	.062	.112		2713-24850-N140	2713-24850-T140	2713-24850-PH140
		.248	.050	.468	.031	.081		2641-24850-N140	2641-24850-T140	2641-24850-PH140
		.248	.050	.468	.062	.112		2714-24850-N140	2714-24850-T140	2714-24850-PH140
		.248	.050	.500	.031	.081		2642-24850-N140	2642-24850-T140	2642-24850-PH140
		.248	.050	.500	.062	.112		2715-24850-N140	2715-24850-T140	2715-24850-PH140
		.248	.050	.562	.031	.081		2644-24850-N140	2644-24850-T140	2644-24850-PH140
		.248	.050	.562	.062	.112		2717-24850-N140	2717-24850-T140	2717-24850-PH140
		.248	.050	.625	.031	.081		2646-24850-N140	2646-24850-T140	2646-24850-PH140
		.248	.050	.625	.062	.112		2718-24850-N140	2718-24850-T140	2718-24850-PH140
		.279	.027	.375	.031	.058		2638-27927-N140	2638-27927-T140	2638-27927-PH140
		.279	.027	.375	.062	.089		2711-27927-N140	2711-27927-T140	2711-27927-PH140
		.279	.027	.437	.031	.058		2640-27927-N140	2640-27927-T140	2640-27927-PH140
		.279	.027	.437	.062	.089		2713-27927-N140	2713-27927-T140	2713-27927-PH140
		.279	.027	.468	.031	.058		2641-27927-N140	2641-27927-T140	2641-27927-PH140
		.279	.027	.468	.062	.089		2714-27927-N140	2714-27927-T140	2714-27927-PH140
		.279	.027	.500	.031	.058		2642-27927-N140	2642-27927-T140	2642-27927-PH140
		.279	.027	.500	.062	.089		2715-27927-N140	2715-27927-T140	2715-27927-PH140
		.279	.027	.562	.031	.058		2644-27927-N140	2644-27927-T140	2644-27927-PH140
		.279	.027	.562	.062	.089		2717-27927-N140	2717-27927-T140	2717-27927-PH140
		.279	.027	.625	.031	.058		2646-27927-N140	2646-27927-T140	2646-27927-PH140
		.279	.027	.625	.062	.089		2718-27927-N140	2718-27927-T140	2718-27927-PH140
		.279	.050	.375	.031	.081		2638-27950-N140	2638-27950-T140	2638-27950-PH140
		.279	.050	.375	.062	.112		2711-27950-N140	2711-27950-T140	2711-27950-PH140
		.279	.050	.437	.031	.081		2640-27950-N140	2640-27950-T140	2640-27950-PH140
		.279	.050	.437	.062	.112		2713-27950-N140	2713-27950-T140	2713-27950-PH140
		.279	.050	.468	.031	.081		2641-27950-N140	2641-27950-T140	2641-27950-PH140
		.279	.050	.468	.062	.112		2714-27950-N140	2714-27950-T140	2714-27950-PH140
		.279	.050	.500	.031	.081		2642-27950-N140	2642-27950-T140	2642-27950-PH140
		.279	.050	.500	.062	.112		2715-27950-N140	2715-27950-T140	2715-27950-PH140
		.279	.050	.562	.031	.081		2644-27950-N140	2644-27950-T140	2644-27950-PH140
		.279	.050	.562	.062	.112		2717-27950-N140	2717-27950-T140	2717-27950-PH140

Continued next page

5 Pasco Hill Road • Cromwell, CT 06416-1093
Phone: 860-828-0847 • Call Toll Free: 800-243-6032 • Fax: 860-828-0381
Web Address: http://www.amatom.com • E-Mail: sales@amatom.com

INSULATING SHOULDER WASHERS

SCREW CLEARANCE NO. 6

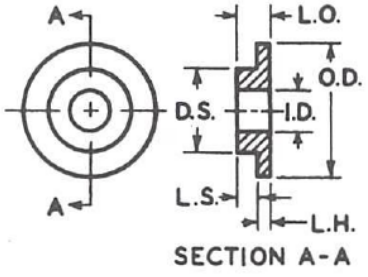

SECTION A-A

TOLERANCES			
I. D.	+.010, -.000	L. H.	±.005
D. S.	+.000, -.010	L. O.	±.005 for .047 - .065 Thick.
L. S.	REF.		±.008 for .075 - .094 Thick.
O. D.	+.015, -.005		±.010 for .095 Thick. & over

Continued from previous page

SCREW SIZE	I. D.	D. S.	L. S.	O. D.	L. H.	L. O.	MATERIAL			
								NYLON (N)	TEFLON (T)	PHENOLIC (PH)
6 (.138)	.140	.279	.050	.625	.031	.081		2646-27950-N140	2646-27950-T140	2646-27950-PH140
		.279	.050	.625	.062	.112		2718-27950-N140	2718-27950-T140	2718-27950-PH140
		.310	.027	.437	.031	.058		2640-31027-N140	2640-31027-T140	2640-31027-PH140
		.310	.027	.437	.062	.089		2713-31027-N140	2713-31027-T140	2713-31027-PH140
		.310	.027	.468	.031	.058		2641-31027-N140	2641-31027-T140	2641-31027-PH140
		.310	.027	.468	.062	.089		2714-31027-N140	2714-31027-T140	2714-31027-PH140
		.310	.027	.500	.031	.058		2642-31027-N140	2642-31027-T140	2642-31027-PH140
		.310	.027	.500	.062	.089		2715-31027-N140	2715-31027-T140	2715-31027-PH140
		.310	.027	.562	.031	.058		2644-31027-N140	2644-31027-T140	2644-31027-PH140
		.310	.027	.562	.062	.089		2717-31027-N140	2717-31027-T140	2717-31027-PH140
		.310	.027	.625	.031	.058		2646-31027-N140	2646-31027-T140	2646-31027-PH140
		.310	.027	.625	.062	.089		2718-31027-N140	2718-31027-T140	2718-31027-PH140

Continued next page

5 Pasco Hill Road • Cromwell, CT 06416-1093
Phone: 860-828-0847 • Call Toll Free: 800-243-6032 • Fax: 860-828-0381
Web Address: http://www.amatom.com • E-Mail: sales@amatom.com

INSULATING SHOULDER WASHERS

SCREW CLEARANCE NO. 6

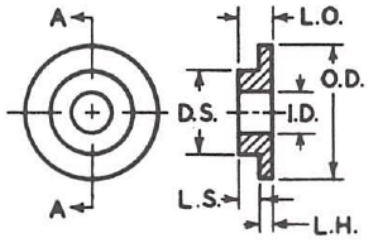

SECTION A-A

TOLERANCES			
I. D.	+.010, -.000	L. H.	±.005
D. S.	+.000, -.010	L. O.	±.005 for .047 - .065 Thick.
L. S.	REF.		±.008 for .075 - .094 Thick.
O. D.	+.015, -.005		±.010 for .095 Thick. & over

Continued from previous page

SCREW SIZE	I. D.	D. S.	L. S.	O. D.	L. H.	L. O.	MATERIAL: NYLON (N)	MATERIAL: TEFLON (T)	MATERIAL: PHENOLIC (PH)
6 (.138)	.140	.310	.050	.437	.031	.081	2640-31050-N140	2640-31050-T140	2640-31050-PH140
		.310	.050	.437	.062	.112	2713-31050-N140	2713-31050-T140	2713-31050-PH140
		.310	.050	.468	.031	.081	2641-31050-N140	2641-31050-T140	2641-31050-PH140
		.310	.050	.468	.062	.112	2714-31050-N140	2714-31050-T140	2714-31050-PH140
		.310	.050	.500	.031	.081	2642-31050-N140	2642-31050-T140	2642-31050-PH140
		.310	.050	.500	.062	.112	2715-31050-N140	2715-31050-T140	2715-31050-PH140
		.310	.050	.562	.031	.081	2644-31050-N140	2644-31050-T140	2644-31050-PH140
		.310	.050	.562	.062	.112	2717-31050-N140	2717-31050-T140	2717-31050-PH140
		.310	.050	.625	.031	.081	2646-31050-N140	2646-31050-T140	2646-31050-PH140
		.310	.050	.625	.062	.112	2718-31050-N140	2718-31050-T140	2718-31050-PH140
	.141	.187	.063	.234	.062	.125	2703-18763-N141	2703-18763-T141	2703-18763-PH141
		.234	.045	.500	.064	.109	2715-23445-N141	2715-23445-T141	2715-23445-PH141
		.237	.032	.375	.062	.094	2711-23732-N141	2711-23732-T141	2711-23732-PH141
	.144	.250	.100	.375	.047	.147	2680-250100-N144	2680-250100-T144	2680-250100-PH144
		.250	.125	.437	.062	.187	2713-250125-N144	2713-250125-T144	2713-250125-PH144
		.312	.050	.437	.062	.112	2713-31250-N144	2713-31250-T144	2713-31250-PH144
	.145	.203	.125	.250	.062	.187	2704-203125-N145	2704-203125-T145	2704-203125-PH145
		.250	.031	.375	.063	.094	2711-25031-N145	2711-25031-T145	2711-25031-PH145
		.265	.016	.375	.062	.078	2711-26516-N145	2711-26516-T145	2711-26516-PH145
		.375	.031	.500	.063	.094	2715-37531-N145	2715-37531-T145	2715-37531-PH145
	.147	.358	.078	.500	.062	.140	2715-35878-N147	2715-35878-T147	2715-35878-PH147
	.149	.250	.025	.375	.062	.087	2711-25025-N149	2711-25025-T149	2711-25025-PH149
	.150	.250	.090	.355	.040	.130	2665-25090-N150	2665-25090-T150	2665-25090-PH150
	.152	.199	.027	.378	.055	.082	2693-19927-N152	2693-19927-T152	2693-19927-PH152
		.203	.085	.296	.038	.123	2661-20385-N152	2661-20385-T152	2661-20385-PH152
	.153	.219	.007	.296	.015	.022	2558-21907-N153	2558-21907-T153	**2558-21907-PH153
	.156	.250	.010	.375	.042	.052	2666-25010-N156	2666-25010-T156	2666-25010-PH156
		.250	.031	.500	.094	.125	2741-25031-N156	2741-25031-T156	2741-25031-PH156
		.250	.063	.437	.062	.125	2713-25063-N156	2713-25063-T156	2713-25063-PH156
		.312	.031	.500	.031	.062	2642-31231-N156	2642-31231-T156	2642-31231-PH156
		.437	.060	.562	.062	.122	2717-43760-N156	2717-43760-T156	2717-43760-PH156
	.160	.220	.031	.343	.047	.078	2679-22031-N160	2679-22031-T160	2679-22031-PH160
		.435	.031	.625	.094	.125	2743-43531-N160	2743-43531-T160	2743-43531-PH160
	.161	.218	.015	.359	.031	.046	2637-21815-N161	2637-21815-T161	2637-21815-PH161
		.275	.091	.433	.078	.169	2728-27591-N161	2728-27591-T161	2728-27591-PH161
	.162	.210	.031	.300	.062	.093	2706-21031-N162	2706-21031-T162	2706-21031-PH162
		.250	.046	.625	.032	.078	2646-25046-N162	2646-25046-T162	2646-25046-PH162
	.163	.213	.046	.437	.046	.092	2681-21346-N163	2681-21346-T163	2681-21346-PH163

Continued next page

5 Pasco Hill Road • Cromwell, CT 06416-1093
Phone: 860-828-0847 • Call Toll Free: 800-243-6032 • Fax: 860-828-0381
Web Address: http://www.amatom.com • E-Mail: sales@amatom.com

INSULATING SHOULDER WASHERS

SCREW CLEARANCE NO. 6

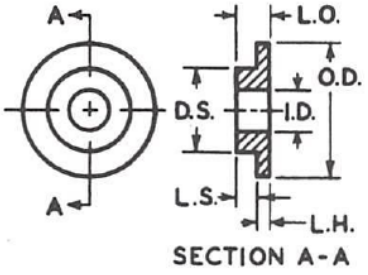

SECTION A-A

TOLERANCES			
I. D.	+.010, -.000	L. H.	±.005
D. S.	+.000, -.010	L. O.	±.005 for .047 - .065 Thick.
L. S.	REF.		±.008 for .075 - .094 Thick.
O. D.	+.015, -.005		±.010 for .095 Thick. & over

Continued from previous page

SCREW SIZE	I. D.	D. S.	L. S.	O. D.	L. H.	L. O.	MATERIAL	NYLON (N)	TEFLON (T)	PHENOLIC (PH)
6 (.138)	.165	.265	.050	.437	.040	.090		2667-26550-N165	2667-26550-T165	2667-26550-PH165
	↓	.281	.016	.625	.031	.047		2646-28116-N165	2646-28116-T165	2646-28116-PH165
		.312	.031	.437	.062	.093		2713-31231-N165	2713-31231-T165	2713-31231-PH165
	.168	.250	.031	.437	.069	.100		2713-25031-N168	2713-25031-T168	2713-25031-PH168
	↓	.250	.047	.375	.062	.109		2711-25047-N168	2711-25047-T168	2711-25047-PH168
		.250	.125	.375	.062	.187		2711-250125-N168	2711-250125-T168	2711-250125-PH168
	.169	.215	.031	.375	.062	.093		2711-21531-N169	2711-21531-T169	2711-21531-PH169
	↓	.215	.062	.375	.063	.125		2711-21562-N169	2711-21562-T169	2711-21562-PH169
		.218	.031	.312	.062	.093		2707-21831-N169	2707-21831-T169	2707-21831-PH169
	↓	.250	.031	.375	.031	.062		2638-25031-N169	2638-25031-T169	2638-25031-PH169
		.312	.031	.562	.125	.156		2761-31231-N169	2761-31231-T169	2761-31231-PH169
	.170	.234	.031	.375	.062	.093		2711-23431-N170	2711-23431-T170	2711-23431-PH170
	↓	.250	.063	.312	.062	.125		2707-25063-N170	2707-25063-T170	2707-25063-PH170

NOTE: ** Not available machined in Phenolic with L.H. thinner than .031. Can be molded if required. Special order only.

5 Pasco Hill Road • Cromwell, CT 06416-1093
Phone: 860-828-0847 • Call Toll Free: 800-243-6032 • Fax: 860-828-0381
Web Address: http://www.amatom.com • E-Mail: sales@amatom.com

INSULATING SHOULDER WASHERS

SCREW CLEARANCE NO. 8

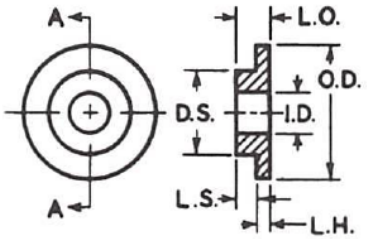

SECTION A-A

TOLERANCES			
I. D.	+.010, -.000	L. H.	±.005
D. S.	+.000, -.010	L. O.	±.005 for .047 - .065 Thick.
L. S.	REF.		±.008 for .075 - .094 Thick.
O. D.	+.015, -.005		±.010 for .095 Thick. & over

SCREW SIZE	I. D.	D. S.	L. S.	O. D.	L. H.	L. O.	MATERIAL			
								NYLON (N)	TEFLON (T)	PHENOLIC (PH)
8 (.164)	.171	.216	.027	.312	.031	.058		2634-21627-N171	2634-21627-T171	2634-21627-PH171
		.216	.027	.312	.062	.089		2707-21627-N171	2707-21627-T171	2707-21627-PH171
		.216	.027	.343	.031	.058		2636-21627-N171	2636-21627-T171	2636-21627-PH171
		.216	.027	.343	.062	.089		2709-21627-N171	2709-21627-T171	2709-21627-PH171
		.216	.027	.375	.031	.058		2638-21627-N171	2638-21627-T171	2638-21627-PH171
		.216	.027	.375	.062	.089		2711-21627-N171	2711-21627-T171	2711-21627-PH171
		.216	.027	.437	.031	.058		2640-21627-N171	2640-21627-T171	2640-21627-PH171
		.216	.027	.437	.062	.089		2713-21627-N171	2713-21627-T171	2713-21627-PH171
		.216	.027	.468	.031	.058		2641-21627-N171	2641-21627-T171	2641-21627-PH171
		.216	.027	.468	.062	.089		2714-21627-N171	2714-21627-T171	2714-21627-PH171
		.216	.027	.500	.031	.058		2642-21627-N171	2642-21627-T171	2642-21627-PH171
		.216	.027	.500	.062	.089		2715-21627-N171	2715-21627-T171	2715-21627-PH171
		.216	.027	.562	.031	.058		2644-21627-N171	2644-21627-T171	2644-21627-PH171
		.216	.027	.562	.062	.089		2717-21627-N171	2717-21627-T171	2717-21627-PH171
		.216	.027	.625	.031	.058		2646-21627-N171	2646-21627-T171	2646-21627-PH171
		.216	.027	.625	.062	.089		2718-21627-N171	2718-21627-T171	2718-21627-PH171
		.216	.050	.312	.031	.081		2634-21650-N171	2634-21650-T171	2634-21650-PH171
		.216	.050	.312	.062	.112		2707-21650-N171	2707-21650-T171	2707-21650-PH171
		.216	.050	.343	.031	.081		2636-21650-N171	2636-21650-T171	2636-21650-PH171
		.216	.050	.343	.062	.112		2709-21650-N171	2709-21650-T171	2709-21650-PH171
		.216	.050	.375	.031	.081		2638-21650-N171	2638-21650-T171	2638-21650-PH171
		.216	.050	.375	.062	.112		2711-21650-N171	2711-21650-T171	2711-21650-PH171
		.216	.050	.437	.031	.081		2640-21650-N171	2640-21650-T171	2640-21650-PH171
		.216	.050	.437	.062	.112		2713-21650-N171	2713-21650-T171	2713-21650-PH171
		.216	.050	.468	.031	.081		2641-21650-N171	2641-21650-T171	2641-21650-PH171
		.216	.050	.468	.062	.112		2714-21650-N171	2714-21650-T171	2714-21650-PH171
		.216	.050	.500	.031	.081		2642-21650-N171	2642-21650-T171	2642-21650-PH171
		.216	.050	.500	.062	.112		2715-21650-N171	2715-21650-T171	2715-21650-PH171
		.216	.050	.562	.031	.081		2644-21650-N171	2644-21650-T171	2644-21650-PH171
		.216	.050	.562	.062	.112		2717-21650-N171	2717-21650-T171	2717-21650-PH171
		.216	.050	.625	.031	.081		2646-21650-N171	2646-21650-T171	2646-21650-PH171
		.216	.050	.625	.062	.112		2718-21650-N171	2718-21650-T171	2718-21650-PH171
		.248	.027	.343	.031	.058		2636-24827-N171	2636-24827-T171	2636-24827-PH171
		.248	.027	.343	.062	.089		2709-24827-N171	2709-24827-T171	2709-24827-PH171
		.248	.027	.375	.031	.058		2638-24827-N171	2638-24827-T171	2638-24827-PH171
		.248	.027	.375	.062	.089		2711-24827-N171	2711-24827-T171	2711-24827-PH171

Continued next page

5 Pasco Hill Road • Cromwell, CT 06416-1093
Phone: 860-828-0847 • Call Toll Free: 800-243-6032 • Fax: 860-828-0381
Web Address: http://www.amatom.com • E-Mail: sales@amatom.com

INSULATING SHOULDER WASHERS

SCREW CLEARANCE NO. 8

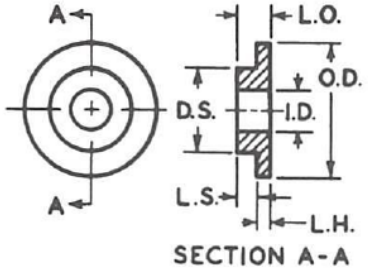

SECTION A-A

TOLERANCES			
I. D.	+.010, -.000	L. H.	±.005
D. S.	+.000, -.010	L. O.	±.005 for .047 - .065 Thick.
L. S.	REF.		±.008 for .075 - .094 Thick.
O. D.	+.015, -.005		±.010 for .095 Thick. & over

Continued from previous page

SCREW SIZE	I. D.	D. S.	L. S.	O. D.	L. H.	L. O.	MATERIAL			
								NYLON (N)	TEFLON (T)	PHENOLIC (PH)
8 (.164)	.171	.248	.027	.437	.031	.058		2640-24827-N171	2640-24827-T171	2640-24827-PH171
		.248	.027	.437	.062	.089		2713-24827-N171	2713-24827-T171	2713-24827-PH171
		.248	.027	.468	.031	.058		2641-24827-N171	2641-24827-T171	2641-24827-PH171
		.248	.027	.468	.062	.089		2714-24827-N171	2714-24827-T171	2714-24827-PH171
		.248	.027	.500	.031	.058		2642-24827-N171	2642-24827-T171	2642-24827-PH171
		.248	.027	.500	.062	.089		2715-24827-N171	2715-24827-T171	2715-24827-PH171
		.248	.027	.562	.031	.058		2644-24827-N171	2644-24827-T171	2644-24827-PH171
		.248	.027	.562	.062	.089		2717-24827-N171	2717-24827-T171	2717-24827-PH171
		.248	.027	.625	.031	.058		2646-24827-N171	2646-24827-T171	2646-24827-PH171
		.248	.027	.625	.062	.089		2718-24827-N171	2718-24827-T171	2718-24827-PH171
		.248	.050	.343	.031	.081		2636-24850-N171	2636-24850-T171	2636-24850-PH171
		.248	.050	.343	.062	.112		2709-24850-N171	2709-24850-T171	2709-24850-PH171
		.248	.050	.375	.031	.081		2638-24850-N171	2638-24850-T171	2638-24850-PH171
		.248	.050	.375	.062	.112		2711-24850-N171	2711-24850-T171	2711-24850-PH171
		.248	.050	.437	.031	.081		2640-24850-N171	2640-24850-T171	2640-24850-PH171
		.248	.050	.437	.062	.112		2713-24850-N171	2713-24850-T171	2713-24850-PH171
		.248	.050	.468	.031	.081		2641-24850-N171	2641-24850-T171	2641-24850-PH171
		.248	.050	.468	.062	.112		2714-24850-N171	2714-24850-T171	2714-24850-PH171
		.248	.050	.500	.031	.081		2642-24850-N171	2642-24850-T171	2642-24850-PH171
		.248	.050	.500	.062	.112		2715-24850-N171	2715-24850-T171	2715-24850-PH171
		.248	.050	.562	.031	.081		2644-24850-N171	2644-24850-T171	2644-24850-PH171
		.248	.050	.562	.062	.112		2717-24850-N171	2717-24850-T171	2717-24850-PH171
		.248	.050	.625	.031	.081		2646-24850-N171	2646-24850-T171	2646-24850-PH171
		.248	.050	.625	.062	.112		2718-24850-N171	2718-24850-T171	2718-24850-PH171
		.250	.087	.500	.100	.187		2752-25087-N171	2752-25087-T171	2752-25087-PH171
		.279	.027	.375	.031	.058		2638-27927-N171	2638-27927-T171	2638-27927-PH171
		.279	.027	.375	.062	.089		2711-27927-N171	2711-27927-T171	2711-27927-PH171

Continued next page

5 Pasco Hill Road • Cromwell, CT 06416-1093
Phone: 860-828-0847 • Call Toll Free: 800-243-6032 • Fax: 860-828-0381
Web Address: http://www.amatom.com • E-Mail: sales@amatom.com

INSULATING SHOULDER WASHERS

SCREW CLEARANCE NO. 8

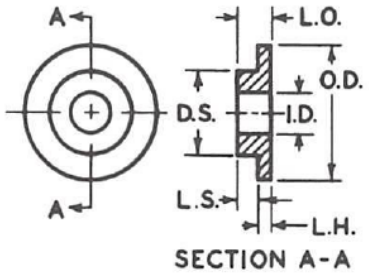

SECTION A-A

TOLERANCES			
I. D.	+.010, -.000	L. H.	±.005
D. S.	+.000, -.010	L. O.	±.005 for .047 - .065 Thick.
L. S.	REF.		±.008 for .075 - .094 Thick.
O. D.	+.015, -.005		±.010 for .095 Thick. & over

Continued from previous page

SCREW SIZE	I. D.	D. S.	L. S.	O. D.	L. H.	L. O.	MATERIAL		
							NYLON (N)	TEFLON	PHENOLIC (PH)
8 (.164)	.171	.279	.027	.437	.031	.058	2640-27927-N171	2640-27927-T171	2640-27927-PH171
		.279	.027	.437	.062	.089	2713-27927-N171	2713-27927-T171	2713-27927-PH171
		.279	.027	.468	.031	.058	2641-27927-N171	2641-27927-T171	2641-27927-PH171
		.279	.027	.468	.062	.089	2714-27927-N171	2714-27927-T171	2714-27927-PH171
		.279	.027	.500	.031	.058	2642-27927-N171	2642-27927-T171	2642-27927-PH171
		.279	.027	.500	.062	.089	2715-27927-N171	2715-27927-T171	2715-27927-PH171
		.279	.027	.562	.031	.058	2644-27927-N171	2644-27927-T171	2644-27927-PH171
		.279	.027	.562	.062	.089	2717-27927-N171	2717-27927-T171	2717-27927-PH171
		.279	.027	.625	.031	.058	2646-27927-N171	2646-27927-T171	2646-27927-PH171
		.279	.027	.625	.062	.089	2718-27927-N171	2718-27927-T171	2718-27927-PH171
		.279	.050	.375	.031	.081	2638-27950-N171	2638-27950-T171	2638-27950-PH171
		.279	.050	.375	.062	.112	2711-27950-N171	2711-27950-T171	2711-27950-PH171
		.279	.050	.437	.031	.081	2640-27950-N171	2640-27950-T171	2640-27950-PH171
		.279	.050	.437	.062	.112	2713-27950-N171	2713-27950-T171	2713-27950-PH171
		.279	.050	.468	.031	.081	2641-27950-N171	2641-27950-T171	2641-27950-PH171
		.279	.050	.468	.062	.112	2714-27950-N171	2714-27950-T171	2714-27950-PH171
		.279	.050	.500	.031	.081	2642-27950-N171	2642-27950-T171	2642-27950-PH171
		.279	.050	.500	.062	.112	2715-27950-N171	2715-27950-T171	2715-27950-PH171
		.279	.050	.562	.031	.081	2644-27950-N171	2644-27950-T171	2644-27950-PH171
		.279	.050	.562	.062	.112	2717-27950-N171	2717-27950-T171	2717-27950-PH171
		.279	.050	.625	.031	.081	2646-27950-N171	2646-27950-T171	2646-27950-PH171
		.279	.050	.625	.062	.112	2718-27950-N171	2718-27950-T171	2718-27950-PH171
		.310	.027	.437	.031	.058	2640-31027-N171	2640-31027-T171	2640-31027-PH171
		.310	.027	.437	.062	.089	2713-31027-N171	2713-31027-T171	2713-31027-PH171
		.310	.027	.468	.031	.058	2641-31027-N171	2641-31027-T171	2641-31027-PH171
		.310	.027	.468	.062	.089	2714-31027-N171	2714-31027-T171	2714-31027-PH171
		.310	.027	.500	.031	.058	2642-31027-N171	2642-31027-T171	2642-31027-PH171
		.310	.027	.500	.062	.089	2715-31027-N171	2715-31027-T171	2715-31027-PH171
		.310	.027	.562	.031	.058	2644-31027-N171	2644-31027-T171	2644-31027-PH171
		.310	.027	.562	.062	.089	2717-31027-N171	2717-31027-T171	2717-31027-PH171
		.310	.027	.625	.031	.058	2646-31027-N171	2646-31027-T171	2646-31027-PH171
		.310	.027	.625	.062	.089	2718-31027-N171	2718-31027-T171	2718-31027-PH171
		.310	.050	.437	.031	.081	2640-31050-N171	2640-31050-T171	2640-31050-PH171
		.310	.050	.437	.062	.112	2713-31050-N171	2713-31050-T171	2713-31050-PH171
		.310	.050	.468	.031	.081	2641-31050-N171	2641-31050-T171	2641-31050-PH171
		.310	.050	.468	.062	.112	2714-31050-N171	2714-31050-T171	2714-31050-PH171

Continued next page

5 Pasco Hill Road • Cromwell, CT 06416-1093
Phone: 860-828-0847 • Call Toll Free: 800-243-6032 • Fax: 860-828-0381
Web Address: http://www.amatom.com • E-Mail: sales@amatom.com

AMATOM®

INSULATING SHOULDER WASHERS

SCREW CLEARANCE NO. 8

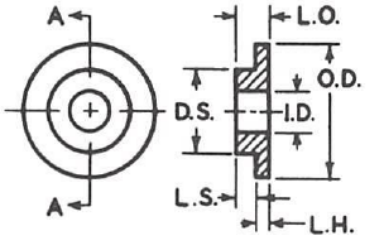

SECTION A-A

TOLERANCES			
I. D.	+.010, -.000	L. H.	±.005
D. S.	+.000, -.010	L. O.	±.005 for .047 - .065 Thick.
L. S.	REF.		±.008 for .075 - .094 Thick.
O. D.	+.015, -.005		±.010 for .095 Thick. & over

Continued from previous page

SCREW SIZE	I. D.	D. S.	L. S.	O. D.	L. H.	L. O.	MATERIAL			
								NYLON (N)	TEFLON	PHENOLIC (PH)
8 (.164)	.171	.310	.050	.500	.031	.081		2642-31050-N171	2642-31050-T171	2642-31050-PH171
		.310	.050	.500	.062	.112		2715-31050-N171	2715-31050-T171	2715-31050-PH171
		.310	.050	.562	.031	.081		2644-31050-N171	2644-31050-T171	2644-31050-PH171
		.310	.050	.562	.062	.112		2717-31050-N171	2717-31050-T171	2717-31050-PH171
		.310	.050	.625	.031	.081		2646-31050-N171	2646-31050-T171	2646-31050-PH171
		.310	.050	.625	.062	.112		2718-31050-N171	2718-31050-T171	2718-31050-PH171
		.375	.031	.500	.063	.094		2715-37531-N171	2715-37531-T171	2715-37531-PH171
	.172	.218	.063	.375	.063	.125		2711-21863-N172	2711-21863-T172	2711-21863-PH172
		.246	.031	.375	.063	.094		2711-24631-N172	2711-24631-T172	2711-24631-PH172
	.173	.370	.093	.500	.063	.156		2715-37093-N173	2715-37093-T173	2715-37093-PH173
	.175	.260	.050	.437	.038	.088		2667-26050-N175	2667-26050-T175	2667-26050-PH175
		.312	.055	.500	.060	.115		2715-31255-N175	2715-31255-T175	2715-31255-PH175
	.177	.312	.023	.500	.060	.083		2715-31223-N177	2715-31223-T177	2715-31223-PH177
	.187	.250	.031	.312	.062	.093		2707-25031-N187	2707-25031-T187	2707-25031-PH187
		.250	.047	.500	.031	.078		2642-25047-N187	2642-25047-T187	2642-25047-PH187
		.265	.031	.375	.062	.093		2711-26531-N187	2711-26531-T187	2711-26531-PH187
		.281	.062	1.500	.062	.124		2725-28162-N187	2725-28162-T187	2725-28162-PH187
		.281	.093	.437	.093	.186		2740-28193-N187	2740-28193-T187	2740-28193-PH187
		.312	.078	.562	.046	.124		2683-31278-N187	2683-31278-T187	2683-31278-PH187
		.372	.078	.437	.046	.124		2681-37278-N187	2681-37278-T187	2681-37278-PH187
	.188	.250	.031	.375	.047	.078		2680-25031-N188	2680-25031-T188	2680-25031-PH188
		.278	.088	.406	.058	.146		2712-27888-N188	2712-27888-T188	2712-27888-PH188
		.280	.045	.500	.062	.107		2715-28045-N188	2715-28045-T188	2715-28045-PH188
		.313	.063	.437	.062	.125		2713-31363-N188	2713-31363-T188	2713-31363-PH188
	.190	.310	.062	.625	.031	.093		2646-31062-N190	2646-31062-T190	2646-31062-PH190
		.312	.046	.500	.125	.171		2760-31246-N190	2760-31246-T190	2760-31246-PH190
	.191	.275	.053	.406	.062	.115		2712-27553-N191	2712-27553-T191	2712-27553-PH191
		.279	.040	.531	.062	.102		2716-27940-N191	2716-27940-T191	2716-27940-PH191
	.192	.233	.015	.281	.020	.035		2582-23315-N192	2582-23315-T192	**2582-23315-PH192
	.193	.368	.025	.500	.062	.087		2715-36825-N193	2715-36825-T193	2715-36825-PH193

NOTE: ** Not available machined in Phenolic with L.H. thinner than .031. Can be molded if required. Special order only.

5 Pasco Hill Road • Cromwell, CT 06416-1093
Phone: 860-828-0847 • Call Toll Free: 800-243-6032 • Fax: 860-828-0381
Web Address: http://www.amatom.com • E-Mail: sales@amatom.com

INSULATING SHOULDER WASHERS

SCREW CLEARANCE NO. 10

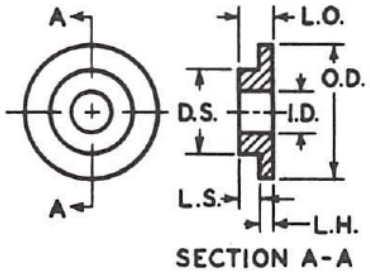

SECTION A-A

TOLERANCES			
I. D.	+.010, -.000	L. H.	±.005
D. S.	+.000, -.010	L. O.	±.005 for .047 - .065 Thick.
L. S.	REF.		±.008 for .075 - .094 Thick.
O. D.	+.015, -.005		±.010 for .095 Thick. & over

SCREW SIZE	I. D.	D. S.	L. S.	O. D.	L. H.	L. O.	MATERIAL		
							NYLON (N)	TEFLON (T)	PHENOLIC (PH)
10 (.190)	.194	.248	.027	.343	.031	.058	2636-24827-N194	2636-24827-T194	2636-24827-PH194
		.248	.027	.343	.062	.089	2709-24827-N194	2709-24827-T194	2709-24827-PH194
		.248	.027	.375	.031	.058	2638-24827-N194	2638-24827-T194	2638-24827-PH194
		.248	.027	.375	.062	.089	2711-24827-N194	2711-24827-T194	2711-24827-PH194
		.248	.027	.437	.031	.058	2640-24827-N194	2640-24827-T194	2640-24827-PH194
		.248	.027	.437	.062	.089	2713-24827-N194	2713-24827-T194	2713-24827-PH194
		.248	.027	.468	.031	.058	2641-24827-N194	2641-24827-T194	2641-24827-PH194
		.248	.027	.468	.062	.089	2714-24827-N194	2714-24827-T194	2714-24827-PH194
		.248	.027	.500	.031	.058	2642-24827-N194	2642-24827-T194	2642-24827-PH194
		.248	.027	.500	.062	.089	2715-24827-N194	2715-24827-T194	2715-24827-PH194
		.248	.027	.562	.031	.058	2644-24827-N194	2644-24827-T194	2644-24827-PH194
		.248	.027	.562	.062	.089	2717-24827-N194	2717-24827-T194	2717-24827-PH194
		.248	.027	.625	.031	.058	2646-24827-N194	2646-24827-T194	2646-24827-PH194
		.248	.027	.625	.062	.089	2718-24827-N194	2718-24827-T194	2718-24827-PH194
		.248	.027	.750	.031	.058	2649-24827-N194	2649-24827-T194	2649-24827-PH194
		.248	.027	.750	.062	.089	2720-24827-N194	2720-24827-T194	2720-24827-PH194
		.248	.050	.343	.031	.081	2636-24850-N194	2636-24850-T194	2636-24850-PH194
		.248	.050	.343	.062	.112	2709-24850-N194	2709-24850-T194	2709-24850-PH194
		.248	.050	.375	.031	.081	2638-24850-N194	2638-24850-T194	2638-24850-PH194
		.248	.050	.375	.062	.112	2711-24850-N194	2711-24850-T194	2711-24850-PH194
		.248	.050	.437	.031	.081	2640-24850-N194	2640-24850-T194	2640-24850-PH194
		.248	.050	.437	.062	.112	2713-24850-N194	2713-24850-T194	2713-24850-PH194
		.248	.050	.468	.031	.081	2641-24850-N194	2641-24850-T194	2641-24850-PH194
		.248	.050	.468	.062	.112	2714-24850-N194	2714-24850-T194	2714-24850-PH194
		.248	.050	.500	.031	.081	2642-24850-N194	2642-24850-T194	2642-24850-PH194
		.248	.050	.500	.062	.112	2715-24850-N194	2715-24850-T194	2715-24850-PH194
		.248	.050	.562	.031	.081	2644-24850-N194	2644-24850-T194	2644-24850-PH194
		.248	.050	.562	.062	.112	2717-24850-N194	2717-24850-T194	2717-24850-PH194
		.248	.050	.625	.031	.081	2646-24850-N194	2646-24850-T194	2646-24850-PH194
		.248	.050	.625	.062	.112	2718-24850-N194	2718-24850-T194	2718-24850-PH194
		.248	.050	.750	.031	.081	2649-24850-N194	2649-24850-T194	2649-24850-PH194
		.248	.050	.750	.062	.112	2720-24850-N194	2720-24850-T194	2720-24850-PH194
		.279	.027	.375	.031	.058	2638-27927-N194	2638-27927-T194	2638-27927-PH194
		.279	.027	.375	.062	.089	2711-27927-N194	2711-27927-T194	2711-27927-PH194
		.279	.027	.437	.031	.058	2640-27927-N194	2640-27927-T194	2640-27927-PH194
		.279	.027	.437	.062	.089	2713-27927-N194	2713-27927-T194	2713-27927-PH194

Continued next page

5 Pasco Hill Road • Cromwell, CT 06416-1093
Phone: 860-828-0847 • Call Toll Free: 800-243-6032 • Fax: 860-828-0381
Web Address: http://www.amatom.com • E-Mail: sales@amatom.com

INSULATING SHOULDER WASHERS

SCREW CLEARANCE NO. 10

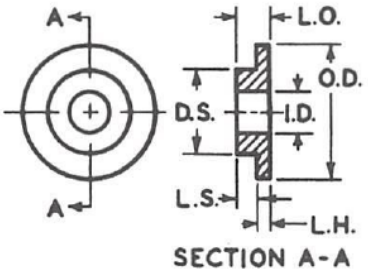

SECTION A-A

TOLERANCES			
I. D.	+.010, -.000	L. H.	±.005
D. S.	+.000, -.010	L. O.	±.005 for .047 - .065 Thick.
L. S.	REF.		±.008 for .075 - .094 Thick.
O. D.	+.015, -.005		±.010 for .095 Thick. & over

Continued from previous page

SCREW SIZE	I. D.	D. S.	L. S.	O. D.	L. H.	L. O.	MATERIAL	NYLON (N)	TEFLON (T)	PHENOLIC (PH)
10 (.190)	.194	.279	.027	.468	.031	.058		2641-27927-N194	2641-27927-T194	2641-27927-PH194
		.279	.027	.468	.062	.089		2714-27927-N194	2714-27927-T194	2714-27927-PH194
		.279	.027	.500	.031	.058		2642-27927-N194	2642-27927-T194	2642-27927-PH194
		.279	.027	.500	.062	.089		2715-27927-N194	2715-27927-T194	2715-27927-PH194
		.279	.027	.562	.031	.058		2644-27927-N194	2644-27927-T194	2644-27927-PH194
		.279	.027	.562	.062	.089		2717-27927-N194	2717-27927-T194	2717-27927-PH194
		.279	.027	.625	.031	.058		2646-27927-N194	2646-27927-T194	2646-27927-PH194
		.279	.027	.625	.062	.089		2718-27927-N194	2718-27927-T194	2718-27927-PH194
		.279	.027	.750	.031	.058		2649-27927-N194	2649-27927-T194	2649-27927-PH194
		.279	.027	.750	.062	.089		2720-27927-N194	2720-27927-T194	2720-27927-PH194
		.279	.050	.375	.031	.081		2638-27950-N194	2638-27950-T194	2638-27950-PH194
		.279	.050	.375	.062	.112		2711-27950-N194	2711-27950-T194	2711-27950-PH194
		.279	.050	.437	.031	.081		2640-27950-N194	2640-27950-T194	2640-27950-PH194
		.279	.050	.437	.062	.112		2713-27950-N194	2713-27950-T194	2713-27950-PH194
		.279	.050	.468	.031	.081		2641-27950-N194	2641-27950-T194	2641-27950-PH194
		.279	.050	.468	.062	.112		2714-27950-N194	2714-27950-T194	2714-27950-PH194
		.279	.050	.500	.031	.081		2642-27950-N194	2642-27950-T194	2642-27950-PH194
		.279	.050	.500	.062	.112		2715-27950-N194	2715-27950-T194	2715-27950-PH194
		.279	.050	.562	.031	.081		2644-27950-N194	2644-27950-T194	2644-27950-PH194
		.279	.050	.562	.062	.112		2717-27950-N194	2717-27950-T194	2717-27950-PH194
		.279	.050	.625	.031	.081		2646-27950-N194	2646-27950-T194	2646-27950-PH194
		.279	.050	.625	.062	.112		2718-27950-N194	2718-27950-T194	2718-27950-PH194
		.279	.050	.750	.031	.081		2649-27950-N194	2649-27950-T194	2649-27950-PH194
		.279	.050	.750	.062	.112		2720-27950-N194	2720-27950-T194	2720-27950-PH194

Continued next page

5 Pasco Hill Road • Cromwell, CT 06416-1093
Phone: 860-828-0847 • Call Toll Free: 800-243-6032 • Fax: 860-828-0381
Web Address: http://www.amatom.com • E-Mail: sales@amatom.com

INSULATING SHOULDER WASHERS

SCREW CLEARANCE NO. 10

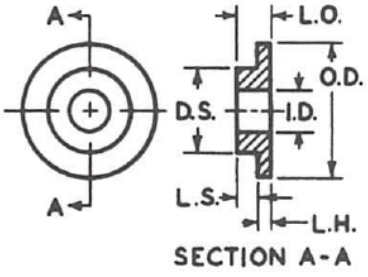

SECTION A-A

TOLERANCES			
I. D.	+.010, -.000	L. H.	±.005
D. S.	+.000, -.010	L. O.	±.005 for .047 - .065 Thick.
L. S.	REF.		±.008 for .075 - .094 Thick.
O. D.	+.015, -.005		±.010 for .095 Thick. & over

Continued from previous page

SCREW SIZE	I. D.	D. S.	L. S.	O. D.	L. H.	L. O.	MATERIAL			
								NYLON (N)	TEFLON (T)	PHENOLIC (PH)
10 (.190)	.194	.310	.027	.437	.031	.058		2640-31027-N194	2640-31027-T194	2640-31027-PH194
		.310	.027	.437	.062	.089		2713-31027-N194	2713-31027-T194	2713-31027-PH194
		.310	.027	.468	.031	.058		2641-31027-N194	2641-31027-T194	2641-31027-PH194
		.310	.027	.468	.062	.089		2714-31027-N194	2714-31027-T194	2714-31027-PH194
		.310	.027	.500	.031	.058		2642-31027-N194	2642-31027-T194	2642-31027-PH194
		.310	.027	.500	.062	.089		2715-31027-N194	2715-31027-T194	2715-31027-PH194
		.310	.027	.562	.031	.058		2644-31027-N194	2644-31027-T194	2644-31027-PH194
		.310	.027	.562	.062	.089		2717-31027-N194	2717-31027-T194	2717-31027-PH194
		.310	.027	.625	.031	.058		2646-31027-N194	2646-31027-T194	2646-31027-PH194
		.310	.027	.625	.062	.089		2718-31027-N194	2718-31027-T194	2718-31027-PH194
		.310	.027	.750	.031	.058		2649-31027-N194	2649-31027-T194	2649-31027-PH194
		.310	.027	.750	.062	.089		2720-31027-N194	2720-31027-T194	2720-31027-PH194
		.310	.050	.437	.031	.081		2640-31050-N194	2640-31050-T194	2640-31050-PH194
		.310	.050	.437	.062	.112		2713-31050-N194	2713-31050-T194	2713-31050-PH194
		.310	.050	.468	.031	.081		2641-31050-N194	2641-31050-T194	2641-31050-PH194
		.310	.050	.468	.062	.112		2714-31050-N194	2714-31050-T194	2714-31050-PH194
		.310	.050	.500	.031	.081		2642-31050-N194	2642-31050-T194	2642-31050-PH194
		.310	.050	.500	.062	.112		2715-31050-N194	2715-31050-T194	2715-31050-PH194
		.310	.050	.562	.031	.081		2644-31050-N194	2644-31050-T194	2644-31050-PH194
		.310	.050	.562	.062	.112		2717-31050-N194	2717-31050-T194	2717-31050-PH194
		.310	.050	.625	.031	.081		2646-31050-N194	2646-31050-T194	2646-31050-PH194
		.310	.050	.625	.062	.112		2718-31050-N194	2718-31050-T194	2718-31050-PH194
		.310	.050	.750	.031	.081		2649-31050-N194	2649-31050-T194	2649-31050-PH194
		.310	.050	.750	.062	.112		2720-31050-N194	2720-31050-T194	2720-31050-PH194
		.341	.027	.468	.031	.058		2641-34127-N194	2641-34127-T194	2641-34127-PH194
		.341	.027	.468	.062	.089		2714-34127-N194	2714-34127-T194	2714-34127-PH194
		.341	.027	.500	.031	.058		2642-34127-N194	2642-34127-T194	2642-34127-PH194
		.341	.027	.500	.062	.089		2715-34127-N194	2715-34127-T194	2715-34127-PH194
		.341	.027	.562	.031	.058		2644-34127-N194	2644-34127-T194	2644-34127-PH194
		.341	.027	.562	.062	.089		2717-34127-N194	2717-34127-T194	2717-34127-PH194
		.341	.027	.625	.031	.058		2646-34127-N194	2646-34127-T194	2646-34127-PH194
		.341	.027	.625	.062	.089		2718-34127-N194	2718-34127-T194	2718-34127-PH194
		.341	.027	.750	.031	.058		2649-34127-N194	2649-34127-T194	2649-34127-PH194
		.341	.027	.750	.062	.089		2720-34127-N194	2720-34127-T194	2720-34127-PH194
		.341	.050	.468	.031	.081		2641-34150-N194	2641-34150-T194	2641-34150-PH194
		.341	.050	.468	.062	.112		2714-34150-N194	2714-34150-T194	2714-34150-PH194

Continued next page

5 Pasco Hill Road • Cromwell, CT 06416-1093
Phone: 860-828-0847 • Call Toll Free: 800-243-6032 • Fax: 860-828-0381
Web Address: http://www.amatom.com • E-Mail: sales@amatom.com

INSULATING SHOULDER WASHERS

SCREW CLEARANCE NO. 10

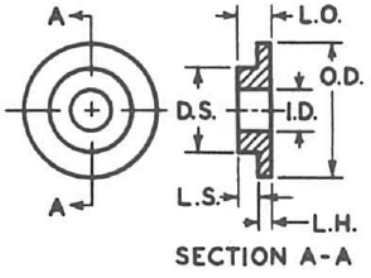

SECTION A-A

TOLERANCES			
I. D.	+.010, -.000	L. H.	±.005
D. S.	+.000, -.010	L. O.	±.005 for .047 - .065 Thick.
L. S.	REF.		±.008 for .075 - .094 Thick.
O. D.	+.015, -.005		±.010 for .095 Thick. & over

Continued from previous page

SCREW SIZE	I. D.	D. S.	L. S.	O. D.	L. H.	L. O.	MATERIAL			
								NYLON (N)	TEFLON (T)	PHENOLIC (PH)
10 (.190)	.194	.341	.050	.500	.031	.081		2642-34150-N194	2642-34150-T194	2642-34150-PH194
		.341	.050	.500	.062	.112		2715-34150-N194	2715-34150-T194	2715-34150-PH194
		.341	.050	.562	.031	.081		2644-34150-N194	2644-34150-T194	2644-34150-PH194
		.341	.050	.562	.062	.112		2717-34150-N194	2717-34150-T194	2717-34150-PH194
		.341	.050	.625	.031	.081		2646-34150-N194	2646-34150-T194	2646-34150-PH194
		.341	.050	.625	.062	.112		2718-34150-N194	2718-34150-T194	2718-34150-PH194
		.341	.050	.750	.031	.081		2649-34150-N194	2649-34150-T194	2649-34150-PH194
		.341	.050	.750	.062	.112		2720-34150-N194	2720-34150-T194	2720-34150-PH194
		.371	.027	.500	.031	.058		2642-37127-N194	2642-37127-T194	2642-37127-PH194
		.371	.027	.500	.062	.089		2715-37127-N194	2715-37127-T194	2715-37127-PH194
		.371	.027	.562	.031	.058		2644-37127-N194	2644-37127-T194	2644-37127-PH194
		.371	.027	.562	.062	.089		2717-37127-N194	2717-37127-T194	2717-37127-PH194
		.371	.027	.625	.031	.058		2646-37127-N194	2646-37127-T194	2646-37127-PH194
		.371	.027	.625	.062	.089		2718-37127-N194	2718-37127-T194	2718-37127-PH194
		.371	.027	.750	.031	.058		2649-37127-N194	2649-37127-T194	2649-37127-PH194
		.371	.027	.750	.062	.089		2720-37127-N194	2720-37127-T194	2720-37127-PH194
		.371	.050	.500	.031	.081		2642-37150-N194	2642-37150-T194	2642-37150-PH194
		.371	.050	.500	.062	.112		2715-37150-N194	2715-37150-T194	2715-37150-PH194
		.371	.050	.562	.031	.081		2644-37150-N194	2644-37150-T194	2644-37150-PH194
		.371	.050	.562	.062	.112		2717-37150-N194	2717-37150-T194	2717-37150-PH194
		.371	.050	.625	.031	.081		2646-37150-N194	2646-37150-T194	2646-37150-PH194
		.371	.050	.625	.062	.112		2718-37150-N194	2718-37150-T194	2718-37150-PH194
		.371	.050	.750	.031	.081		2649-37150-N194	2649-37150-T194	2649-37150-PH194
		.371	.050	.750	.062	.112		2720-37150-N194	2720-37150-T194	2720-37150-PH194

Continued next page

5 Pasco Hill Road • Cromwell, CT 06416-1093
Phone: 860-828-0847 • Call Toll Free: 800-243-6032 • Fax: 860-828-0381
Web Address: http://www.amatom.com • E-Mail: sales@amatom.com

INSULATING SHOULDER WASHERS

SCREW CLEARANCE NO. 10

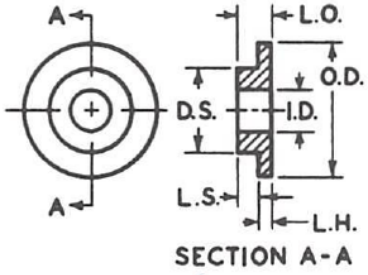

SECTION A-A

TOLERANCES			
I. D.	+.010, -.000	L. H.	±.005
D. S.	+.000, -.010	L. O.	±.005 for .047 - .065 Thick.
L. S.	REF.		±.008 for .075 - .094 Thick.
O. D.	+.015, -.005		±.010 for .095 Thick. & over

Continued from previous page

SCREW SIZE	I. D.	D. S.	L. S.	O. D.	L. H.	L. O.	MATERIAL			
								NYLON (N)	TEFLON (T)	PHENOLIC (PH)
10 (.190)	.194	.432	.027	.562	.031	.058		2644-43227-N194	2644-43227-T194	2644-43227-PH194
		.432	.027	.562	.062	.089		2717-43227-N194	2717-43227-T194	2717-43227-PH194
		.432	.027	.625	.031	.058		2646-43227-N194	2646-43227-T194	2646-43227-PH194
		.432	.027	.625	.062	.089		2718-43227-N194	2718-43227-T194	2718-43227-PH194
		.432	.027	.750	.031	.058		2649-43227-N194	2649-43227-T194	2649-43227-PH194
		.432	.027	.750	.062	.089		2720-43227-N194	2720-43227-T194	2720-43227-PH194
		.432	.050	.562	.031	.081		2644-43250-N194	2644-43250-T194	2644-43250-PH194
		.432	.050	.562	.062	.112		2717-43250-N194	2717-43250-T194	2717-43250-PH194
		.432	.050	.625	.031	.081		2646-43250-N194	2646-43250-T194	2646-43250-PH194
		.432	.050	.625	.062	.112		2718-43250-N194	2718-43250-T194	2718-43250-PH194
		.432	.050	.750	.031	.081		2649-43250-N194	2649-43250-T194	2649-43250-PH194
		.432	.050	.750	.062	.112		2720-43250-N194	2720-43250-T194	2720-43250-PH194
		.495	.027	.625	.031	.058		2646-49527-N194	2646-49527-T194	2646-49527-PH194
		.495	.027	.625	.062	.089		2718-49527-N194	2718-49527-T194	2718-49527-PH194
		.495	.027	.750	.031	.058		2649-49527-N194	2649-49527-T194	2649-49527-PH194
		.495	.027	.750	.062	.089		2720-49527-N194	2720-49527-T194	2720-49527-PH194
		.495	.050	.625	.031	.081		2646-49550-N194	2646-49550-T194	2646-49550-PH194
		.495	.050	.625	.062	.112		2718-49550-N194	2718-49550-T194	2718-49550-PH194
		.495	.050	.750	.031	.081		2649-49550-N194	2649-49550-T194	2649-49550-PH194
		.495	.050	.750	.062	.112		2720-49550-N194	2720-49550-T194	2720-49550-PH194
	.195	.240	.023	.375	.039	.062		2666-24023-N195	2666-24023-T195	2666-24023-PH195
		.248	.030	.531	.040	.070		2669-24830-N195	2669-24830-T195	2669-24830-PH195
		.310	.053	.437	.047	.100		2681-31053-N195	2681-31053-T195	2681-31053-PH195
		.437	.078	.630	.078	.156		2731-43778-N195	2731-43778-T195	2731-43778-PH195
	.196	.246	.032	.375	.062	.094		2711-24632-N196	2711-24632-T196	2711-24632-PH196
		.250	.031	.312	.062	.093		2707-25031-N196	2707-25031-T196	2707-25031-PH196
		.255	.031	.437	.031	.062		2640-25531-N196	2640-25531-T196	2640-25531-PH196
		.274	.095	.500	.045	.140		2682-27495-N196	2682-27495-T196	2682-27495-PH196
		.312	.062	.625	.094	.156		2743-31262-N196	2743-31262-T196	2743-31262-PH196
		.308	.032	.375	.062	.094		2711-30832-N196	2711-30832-T196	2711-30832-PH196
		.375	.031	.625	.031	.062		2646-37531-N196	2646-37531-T196	2646-37531-PH196
	.198	.247	.039	.750	.075	.114		2732-24739-N198	2732-24739-T198	2732-24739-PH198
		.375	.031	.500	.063	.094		2715-37531-N198	2715-37531-T198	2715-37531-PH198
	.199	.305	.055	.468	.078	.133		2729-30555-N199	2729-30555-T199	2729-30555-PH199
	.200	.240	.032	.500	.062	.094		2715-24032-N200	2715-24032-T200	2715-24032-PH200
		.240	.063	.500	.062	.125		2715-24063-N200	2715-24063-T200	2715-24063-PH200
		.245	.016	.437	.062	.078		2713-24516-N200	2713-24516-T200	2713-24516-PH200

Continued next page

5 Pasco Hill Road • Cromwell, CT 06416-1093
Phone: 860-828-0847 • Call Toll Free: 800-243-6032 • Fax: 860-828-0381
Web Address: http://www.amatom.com • E-Mail: sales@amatom.com

INSULATING SHOULDER WASHERS

SCREW CLEARANCE NO. 10

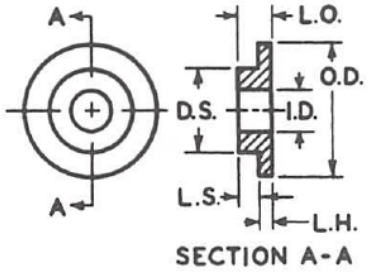

SECTION A-A

TOLERANCES			
I. D.	+.010, -.000	L. H.	±.005
D. S.	+.000, -.010	L. O.	±.005 for .047 - .065 Thick.
L. S.	REF.		±.008 for .075 - .094 Thick.
O. D.	+.015, -.005		±.010 for .095 Thick. & over

Continued from previous page

SCREW SIZE	I. D.	D. S.	L. S.	O. D.	L. H.	L. O.	MATERIAL	NYLON (N)	TEFLON (T)	PHENOLIC (PH)
10 (.190)	.201	.358	.031	.750	.125	.156		2765-35831-N201	2765-35831-T201	2765-35831-PH201
	↓	.358	.031	1.000	.125	.156		2768-35831-N201	2768-35831-T201	2768-35831-PH201
		.358	.031	1.375	.125	.156		2771-35831-N201	2771-35831-T201	2771-35831-PH201
		.500	.020	1.375	.105	.125		2754-50020-N201	2754-50020-T201	2754-50020-PH201
	.203	.250	.032	.500	.093	.125		2741-25032-N203	2741-25032-T203	2741-25032-PH203
	↓	.296	.031	.468	.062	.093		2714-29631-N203	2714-29631-T203	2714-29631-PH203
		.300	.063	.437	.062	.125		2713-30063-N203	2713-30063-T203	2713-30063-PH203
		.307	.063	.437	.062	.125		2713-30763-N203	2713-30763-T203	2713-30763-PH203
		.312	.093	.750	.093	.186		2746-31293-N203	2746-31293-T203	2746-31293-PH203
		.312	.109	.750	.062	.171		2720-312109-N203	2720-312109-T203	2720-312109-PH203
	.205	.277	.042	.380	.070	.112		2727-27742-N205	2727-27742-T205	2727-27742-PH205
	↓	.281	.078	.500	.062	.140		2715-28178-N205	2715-28178-T205	2715-28178-PH205
		.324	.016	.590	.045	.061		2684-32416-N205	2684-32416-T205	2684-32416-PH205
	.208	.245	.016	.437	.062	.078		2713-24516-N208	2713-24516-T208	2713-24516-PH208
	.210	.281	.025	.437	.055	.080		2694-28125-N210	2694-28125-T210	2694-28125-PH210
	↓	.380	.090	.635	.042	.132		2671-38090-N210	2671-38090-T210	2671-38090-PH210
	.212	.272	.025	.343	.031	.056		2636-27225-N212	2636-27225-T212	2636-27225-PH212
	.218	.281	.030	.375	.050	.080		2693-28130-N218	2693-28130-T218	2693-28130-PH218
		.310	.062	.500	.125	.187		2760-31062-N218	2760-31062-T218	2760-31062-PH218
		.312	.063	.500	.062	.125		2715-31263-N218	2715-31263-T218	2715-31263-PH218
		.373	.070	.500	.055	.125		2695-37370-N218	2695-37370-T218	2695-37370-PH218
		.375	.063	.500	.062	.125		2715-37563-N218	2715-37563-T218	2715-37563-PH218
	↓	.375	.090	.625	.045	.135		2685-37590-N218	2685-37590-T218	2685-37590-PH218

5 Pasco Hill Road • Cromwell, CT 06416-1093
Phone: 860-828-0847 • Call Toll Free: 800-243-6032 • Fax: 860-828-0381
Web Address: http://www.amatom.com • E-Mail: sales@amatom.com

INSULATING SHOULDER WASHERS

SCREW CLEARANCE NO. 12

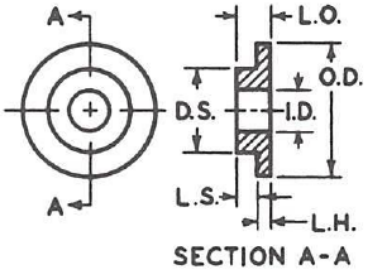

SECTION A-A

TOLERANCES			
I. D.	+.010, -.000	L. H.	±.005
D. S.	+.000, -.010	L. O.	±.005 for .047 - .065 Thick.
L. S.	REF.		±.008 for .075 - .094 Thick.
O. D.	+.015, -.005		±.010 for .095 Thick. & over

SCREW SIZE	I. D.	D. S.	L. S.	O. D.	L. H.	L. O.	MATERIAL			
								NYLON (N)	TEFLON (T)	PHENOLIC (PH)
12 (.216)	.219	.279	.027	.375	.031	.058		2638-27927-N219	2638-27927-T219	2638-27927-PH219
		.279	.027	.375	.062	.089		2711-27927-N219	2711-27927-T219	2711-27927-PH219
		.279	.027	.437	.031	.058		2640-27927-N219	2640-27927-T219	2640-27927-PH219
		.279	.027	.437	.062	.089		2713-27927-N219	2713-27927-T219	2713-27927-PH219
		.279	.027	.468	.031	.058		2641-27927-N219	2641-27927-T219	2641-27927-PH219
		.279	.027	.468	.062	.089		2714-27927-N219	2714-27927-T219	2714-27927-PH219
		.279	.027	.500	.031	.058		2642-27927-N219	2642-27927-T219	2642-27927-PH219
		.279	.027	.500	.062	.089		2715-27927-N219	2715-27927-T219	2715-27927-PH219
		.279	.027	.562	.031	.058		2644-27927-N219	2644-27927-T219	2644-27927-PH219
		.279	.027	.562	.062	.089		2717-27927-N219	2717-27927-T219	2717-27927-PH219
		.279	.027	.625	.031	.058		2646-27927-N219	2646-27927-T219	2646-27927-PH219
		.279	.027	.625	.062	.089		2718-27927-N219	2718-27927-T219	2718-27927-PH219
		.279	.027	.750	.031	.058		2649-27927-N219	2649-27927-T219	2649-27927-PH219
		.279	.027	.750	.062	.089		2720-27927-N219	2720-27927-T219	2720-27927-PH219
		.279	.050	.375	.031	.081		2638-27950-N219	2638-27950-T219	2638-27950-PH219
		.279	.050	.375	.062	.112		2711-27950-N219	2711-27950-T219	2711-27950-PH219
		.279	.050	.437	.031	.081		2640-27950-N219	2640-27950-T219	2640-27950-PH219
		.279	.050	.437	.062	.112		2713-27950-N219	2713-27950-T219	2713-27950-PH219
		.279	.050	.468	.031	.081		2641-27950-N219	2641-27950-T219	2641-27950-PH219
		.279	.050	.468	.062	.112		2714-27950-N219	2714-27950-T219	2714-27950-PH219
		.279	.050	.500	.031	.081		2642-27950-N219	2642-27950-T219	2642-27950-PH219
		.279	.050	.500	.062	.112		2715-27950-N219	2715-27950-T219	2715-27950-PH219
		.279	.050	.562	.031	.081		2644-27950-N219	2644-27950-T219	2644-27950-PH219
		.279	.050	.562	.062	.112		2717-27950-N219	2717-27950-T219	2717-27950-PH219
		.279	.050	.625	.031	.081		2646-27950-N219	2646-27950-T219	2646-27950-PH219
		.279	.050	.625	.062	.112		2718-27950-N219	2718-27950-T219	2718-27950-PH219
		.279	.050	.750	.031	.081		2649-27950-N219	2649-27950-T219	2649-27950-PH219
		.279	.050	.750	.062	.112		2720-27950-N129	2720-27950-T219	2720-27950-PH219
		.310	.027	.437	.031	.058		2640-31027-N219	2640-31027-T219	2640-31027-PH219
		.310	.027	.437	.062	.089		2713-31027-N219	2713-31027-T219	2713-31027-PH219
		.310	.027	.468	.031	.058		2641-31027-N219	2641-31027-T219	2641-31027-PH219
		.310	.027	.468	.062	.089		2714-31027-N219	2714-31027-T219	2714-31027-PH219
		.310	.027	.500	.031	.058		2642-31027-N219	2642-31027-T219	2642-31027-PH219
		.310	.027	.500	.062	.089		2715-31027-N219	2715-31027-T219	2715-31027-PH219
		.310	.027	.562	.031	.058		2644-31027-N219	2644-31027-T219	2644-31027-PH219
		.310	.027	.562	.062	.089		2717-31027-N219	2717-31027-T219	2717-31027-PH219

Continued next page

5 Pasco Hill Road • Cromwell, CT 06416-1093
Phone: 860-828-0847 • Call Toll Free: 800-243-6032 • Fax: 860-828-0381
Web Address: http://www.amatom.com • E-Mail: sales@amatom.com

AMATOM®

INSULATING SHOULDER WASHERS

SCREW CLEARANCE NO. 12

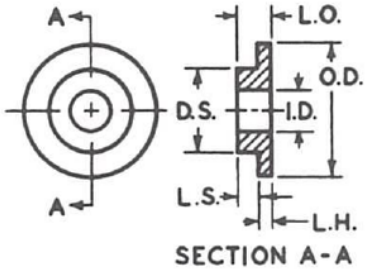

SECTION A-A

TOLERANCES			
I. D.	+.010, -.000	L. H.	±.005
D. S.	+.000, -.010	L. O.	±.005 for .047 - .065 Thick.
L. S.	REF.		±.008 for .075 - .094 Thick.
O. D.	+.015, -.005		±.010 for .095 Thick. & over

Continued from previous page

SCREW SIZE	I. D.	D. S.	L. S.	O. D.	L. H.	L. O.	MATERIAL			
								NYLON (N)	TEFLON (T)	PHENOLIC (PH)
12 (.216)	.219	.310	.027	.625	.031	.058		2646-31027-N219	2646-31027-T219	2646-31027-PH219
		.310	.027	.625	.062	.089		2718-31027-N219	2718-31027-T219	2718-31027-PH219
		.310	.027	.750	.031	.058		2649-31027-N219	2649-31027-T219	2649-31027-PH219
		.310	.027	.750	.062	.089		2720-31027-N219	2720-31027-T219	2720-31027-PH219
		.310	.050	.437	.031	.081		2640-31050-N219	2640-31050-T219	2640-31050-PH219
		.310	.050	.437	.062	.112		2713-31050-N219	2713-31050-T219	2713-31050-PH219
		.310	.050	.468	.031	.081		2641-31050-N219	2641-31050-T219	2641-31050-PH219
		.310	.050	.468	.062	.112		2714-31050-N219	2714-31050-T219	2714-31050-PH219
		.310	.050	.500	.031	.081		2642-31050-N219	2642-31050-T219	2642-31050-PH219
		.310	.050	.500	.062	.112		2715-31050-N219	2715-31050-T219	2715-31050-PH219
		.310	.050	.562	.031	.081		2644-31050-N219	2644-31050-T219	2644-31050-PH219
		.310	.050	.562	.062	.112		2717-31050-N219	2717-31050-T219	2717-31050-PH219
		.310	.050	.625	.031	.081		2646-31050-N219	2646-31050-T219	2646-31050-PH219
		.310	.050	.625	.062	.112		2718-31050-N219	2718-31050-T219	2718-31050-PH219
		.310	.050	.750	.031	.081		2649-31050-N219	2649-31050-T219	2649-31050-PH219
		.310	.050	.750	.062	.112		2720-31050-N219	2720-31050-T219	2720-31050-PH219
		.341	.027	.468	.031	.058		2641-34127-N219	2641-34127-T219	2641-34127-PH219
		.341	.027	.468	.062	.089		2714-34127-N219	2714-34127-T219	2714-34127-PH219
		.341	.027	.500	.031	.058		2642-34127-N219	2642-34127-T219	2642-34127-PH219
		.341	.027	.500	.062	.089		2715-34127-N219	2715-34127-T219	2715-34127-PH219
		.341	.027	.562	.031	.058		2644-34127-N219	2644-34127-T219	2644-34127-PH219

Continued next page

5 Pasco Hill Road • Cromwell, CT 06416-1093
Phone: 860-828-0847 • Call Toll Free: 800-243-6032 • Fax: 860-828-0381
Web Address: http://www.amatom.com • E-Mail: sales@amatom.com

INSULATING SHOULDER WASHERS

SCREW CLEARANCE NO. 12

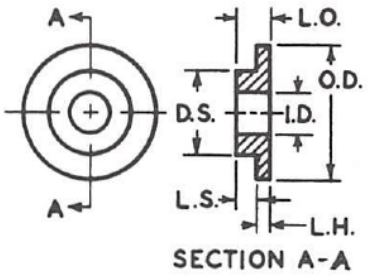

SECTION A-A

TOLERANCES			
I. D.	+.010, -.000	L. H.	±.005
D. S.	+.000, -.010	L. O.	±.005 for .047 - .065 Thick.
L. S.	REF.		±.008 for .075 - .094 Thick.
O. D.	+.015, -.005		±.010 for .095 Thick. & over

Continued from previous page

SCREW SIZE	I. D.	D. S.	L. S.	O. D.	L. H.	L. O.	MATERIAL		
							NYLON (N)	TEFLON (T)	PHENOLIC (PH)
12 (.216)	.219	.341	.027	.562	.062	.089	2717-34127-N219	2717-34127-T219	2717-34127-PH219
		.341	.027	.625	.031	.058	2646-34127-N219	2646-34127-T219	2646-34127-PH219
		.341	.027	.625	.062	.089	2718-34127-N219	2718-34127-T219	2718-34127-PH219
		.341	.027	.750	.031	.058	2649-34127-N219	2649-34127-T219	2649-34127-PH219
		.341	.027	.750	.062	.089	2720-34127-N219	2720-34127-T219	2720-34127-PH219
		.341	.050	.468	.031	.081	2641-34150-N219	2641-34150-T219	2641-34150-PH219
		.341	.050	.468	.062	.112	2714-34150-N219	2714-34150-T219	2714-34150-PH219
		.341	.050	.500	.031	.081	2642-34150-N219	2642-34150-T219	2642-34150-PH219
		.341	.050	.500	.062	.112	2715-34150-N219	2715-34150-T219	2715-34150-PH219
		.341	.050	.562	.031	.081	2644-34150-N219	2644-34150-T219	2644-34150-PH219
		.341	.050	.562	.062	.112	2717-34150-N219	2717-34150-T219	2717-34150-PH219
		.341	.050	.625	.031	.081	2646-34150-N219	2646-34150-T219	2646-34150-PH219
		.341	.050	.625	.062	.112	2718-34150-N219	2718-34150-T219	2718-34150-PH219
		.341	.050	.750	.031	.081	2649-34150-N219	2649-34150-T219	2649-34150-PH219
		.341	.050	.750	.062	.112	2720-34150-N219	2720-34150-T219	2720-34150-PH219
		.371	.027	.500	.031	.058	2642-37127-N219	2642-37127-T219	2642-37127-PH219
		.371	.027	.500	.062	.089	2715-37127-N219	2715-37127-T219	2715-37127-PH219
		.371	.027	.562	.031	.058	2644-37127-N219	2644-37127-T219	2644-37127-PH219
		.371	.027	.562	.062	.089	2717-37127-N219	2717-37127-T219	2717-37127-PH219
		.371	.027	.625	.031	.058	2646-37127-N219	2646-37127-T219	2646-37127-PH219
		.371	.027	.625	.062	.089	2718-37127-N219	2718-37127-T219	2718-37127-PH219
		.371	.027	.750	.031	.058	2649-37127-N219	2649-37127-T219	2649-37127-PH219
		.371	.027	.750	.062	.089	2720-37127-N219	2720-37127-T219	2720-37127-PH219
		.371	.050	.500	.031	.081	2642-37150-N219	2642-37150-T219	2642-37150-PH219
		.371	.050	.500	.062	.112	2715-37150-N219	2715-37150-T219	2715-37150-PH219
		.371	.050	.562	.031	.081	2644-37150-N219	2644-37150-T219	2644-37150-PH219
		.371	.050	.562	.062	.112	2717-37150-N219	2717-37150-T219	2717-37150-PH219
		.371	.050	.625	.031	.081	2646-37150-N219	2646-37150-T219	2646-37150-PH219
		.371	.050	.625	.062	.112	2718-37150-N219	2718-37150-T219	2718-37150-PH219
		.371	.050	.750	.031	.081	2649-37150-N219	2649-37150-T219	2649-37150-PH219
		.371	.050	.750	.062	.112	2720-37150-N219	2720-37150-T219	2720-37150-PH219
		.432	.027	.562	.031	.058	2644-43227-N219	2644-43227-T219	2644-43227-PH219
		.432	.027	.562	.062	.089	2717-43227-N219	2717-43227-T219	2717-43227-PH219
		.432	.027	.625	.031	.058	2646-43227-N219	2646-43227-T219	2646-43227-PH219
		.432	.027	.625	.062	.089	2718-43227-N219	2718-43227-T219	2718-43227-PH219
		.432	.027	.750	.031	.058	2649-43227-N219	2649-43227-T219	2649-43227-PH219

Continued next page

5 Pasco Hill Road • Cromwell, CT 06416-1093
Phone: 860-828-0847 • Call Toll Free: 800-243-6032 • Fax: 860-828-0381
Web Address: http://www.amatom.com • E-Mail: sales@amatom.com

INSULATING SHOULDER WASHERS

SCREW CLEARANCE NO. 12

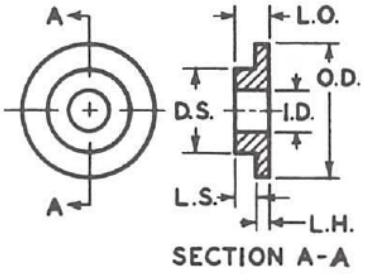

SECTION A-A

TOLERANCES			
I. D.	+.010, -.000	L. H.	±.005
D. S.	+.000, -.010	L. O.	±.005 for .047 - .065 Thick.
L. S.	REF.		±.008 for .075 - .094 Thick.
O. D.	+.015, -.005		±.010 for .095 Thick. & over

Continued from previous page

SCREW SIZE	I. D.	D. S.	L. S.	O. D.	L. H.	L. O.	MATERIAL			
								NYLON (N)	TEFLON (T)	PHENOLIC (PH)
12	.219	.432	.027	.750	.062	.089		2720-43227-N219	2720-43227-T219	2720-43227-PH219
(.216)		.432	.050	.562	.031	.081		2644-43250-N219	2644-43250-T219	2644-43250-PH219
		.432	.050	.562	.062	.112		2717-43250-N219	2717-43250-T219	2717-43250-PH219
		.432	.050	.625	.031	.081		2646-43250-N219	2646-43250-T219	2646-43250-PH219
		.432	.050	.625	.062	.112		2718-43250-N219	2718-43250-T219	2718-43250-PH219
		.432	.050	.750	.031	.081		2649-43250-N219	2649-43250-T219	2649-43250-PH219
		.432	.050	.750	.062	.112		2720-43250-N219	2720-43250-T219	2720-43250-PH219
		.495	.027	.625	.031	.058		2646-49527-N219	2646-49527-T219	2646-49527-PH219
		.495	.027	.625	.062	.089		2718-49527-N219	2718-49527-T219	2718-49527-PH219
		.495	.027	.750	.031	.058		2649-49527-N219	2649-49527-T219	2649-49527-PH219
		.495	.027	.750	.062	.089		2720-49527-N219	2720-49527-T219	2720-49527-PH219
		.495	.050	.625	.031	.081		2646-49550-N219	2646-49550-T219	2646-49550-PH219
		.495	.050	.625	.062	.112		2718-49550-N219	2718-49550-T219	2718-49550-PH219
		.495	.050	.750	.031	.081		2649-49550-N219	2649-49550-T219	2649-49550-PH219
		.495	.050	.750	.062	.112		2720-49550-N219	2720-49550-T219	2720-49550-PH219
	.230	.307	.011	.500	.020	.031		2592-30711-N230	2592-30711-T230	**2592-30711-PH230
	.233	.340	.055	.500	.078	.133		2730-34055-N233	2730-34055-T233	2730-34055-PH233
	.234	.343	.031	.500	.031	.062		2642-34331-N234	2642-34331-T234	2642-34331-PH234

NOTE: ** Not available machined in Phenolic with L.H. thinner than .031. Can be molded if required. Special order only.

5 Pasco Hill Road • Cromwell, CT 06416-1093
Phone: 860-828-0847 • Call Toll Free: 800-243-6032 • Fax: 860-828-0381
Web Address: http://www.amatom.com • E-Mail: sales@amatom.com

INSULATING SHOULDER WASHERS

SCREW CLEARANCE NO. 1/4

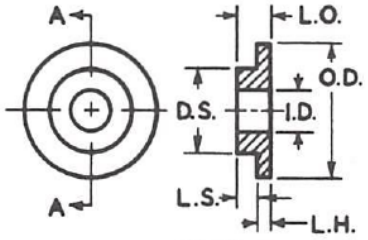

SECTION A-A

TOLERANCES			
I. D.	+.010, -.000	L. H.	±.005
D. S.	+.000, -.010	L. O.	±.005 for .047 - .065 Thick.
L. S.	REF.		±.008 for .075 - .094 Thick.
O. D.	+.015, -.005		±.010 for .095 Thick. & over

SCREW SIZE	I. D.	D. S.	L. S.	O. D.	L. H.	L. O.	MATERIAL		
							NYLON (N)	TEFLON (T)	PHENOLIC (PH)
1/4 (.250)	.252	.312	.028	.500	.040	.068	2668-31228-N252	2668-31228-T252	2668-31228-PH252
		.312	.031	.500	.031	.062	2642-31231-N252	2642-31231-T252	2642-31231-PH252
		.312	.032	.500	.062	.094	2715-31232-N252	2715-31232-T252	2715-31232-PH252
		.312	.062	.375	.125	.187	2758-31262-N252	2758-31262-T252	2758-31262-PH252
		.312	.063	.500	.062	.125	2715-31263-N252	2715-31263-T252	2715-31263-PH252
		.312	.063	.750	.062	.125	2720-31263-N252	2720-31263-T252	2720-31263-PH252
		.343	.062	.625	.125	.187	2762-34362-N252	2762-34362-T252	2762-34362-PH252
		.372	.025	.500	.062	.087	2715-37225-N252	2715-37225-T252	2715-37225-PH252
		.375	.032	.500	.031	.063	2642-37532-N252	2642-37532-T252	2642-37532-PH252
		.437	.032	.625	.062	.094	2718-43732-N252	2718-43732-T252	2718-43732-PH252
	.253	.310	.027	.437	.031	.058	2640-31027-N253	2640-31027-T253	2640-31027-PH253
		.310	.027	.437	.062	.089	2713-31027-N253	2713-31027-T253	2713-31027-PH253
		.310	.027	.468	.031	.058	2641-31027-N253	2641-31027-T253	2641-31027-PH253
		.310	.027	.468	.062	.089	2714-31027-N253	2714-31027-T253	2714-31027-PH253
		.310	.027	.500	.031	.058	2642-31027-N253	2642-31027-T253	2642-31027-PH253
		.310	.027	.500	.062	.089	2715-31027-N253	2715-31027-T253	2715-31027-PH253
		.310	.027	.562	.031	.058	2644-31027-N253	2644-31027-T253	2644-31027-PH253
		.310	.027	.562	.062	.089	2717-31027-N253	2717-31027-T253	2717-31027-PH253
		.310	.027	.625	.031	.058	2646-31027-N253	2646-31027-T253	2646-31027-PH253
		.310	.027	.625	.062	.089	2718-31027-N253	2718-31027-T253	2718-31027-PH253
		.310	.027	.750	.031	.058	2649-31027-N253	2649-31027-T253	2649-31027-PH253
		.310	.027	.750	.062	.089	2720-31027-N253	2720-31027-T253	2720-31027-PH253
		.310	.050	.437	.031	.081	2640-31050-N253	2640-31050-T253	2640-31050-PH253
		.310	.050	.437	.062	.112	2713-31050-N253	2713-31050-T253	2713-31050-PH253
		.310	.050	.468	.031	.081	2641-31050-N253	2641-31050-T253	2641-31050-PH253
		.310	.050	.468	.062	.112	2714-31050-N253	2714-31050-T253	2714-31050-PH253
		.310	.050	.500	.031	.081	2642-31050-N253	2642-31050-T253	2642-31050-PH253
		.310	.050	.500	.062	.112	2715-31050-N253	2715-31050-T253	2715-31050-PH253
		.310	.050	.562	.031	.081	2644-31050-N253	2644-31050-T253	2644-31050-PH253
		.310	.050	.562	.062	.112	2717-31050-N253	2717-31050-T253	2717-31050-PH253
		.310	.050	.625	.031	.081	2646-31050-N253	2646-31050-T253	2646-31050-PH253
		.310	.050	.625	.062	.112	2718-31050-N253	2718-31050-T253	2718-31050-PH253
		.310	.050	.750	.031	.081	2649-31050-N253	2649-31050-T253	2649-31050-PH253
		.310	.050	.750	.062	.112	2720-31050-N253	2720-31050-T253	2720-31050-PH253
		.312	.094	.437	.062	.156	2713-31294-N253	2713-31294-T253	2713-31294-PH253
		.341	.027	.468	.031	.058	2641-34127-N253	2641-34127-T253	2641-34127-PH253

Continued next page

INSULATING SHOULDER WASHERS

SCREW CLEARANCE NO. 1/4

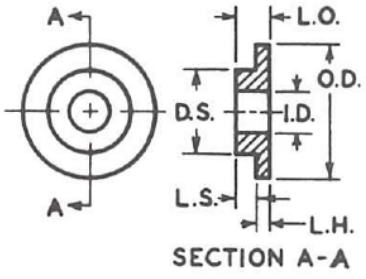

SECTION A-A

TOLERANCES			
I. D.	+.010, -.000	L. H.	±.005
D. S.	+.000, -.010	L. O.	±.005 for .047 - .065 Thick.
L. S.	REF.		±.008 for .075 - .094 Thick.
O. D.	+.015, -.005		±.010 for .095 Thick. & over

Continued from previous page

SCREW SIZE	I. D.	D. S.	L. S.	O. D.	L. H.	L. O.	MATERIAL	NYLON (N)	TEFLON (T)	PHENOLIC (PH)
1/4 (.250)	.253	.341	.027	.468	.062	.089		2714-34127-N253	2714-34127-T253	2714-34127-PH253
		.341	.027	.500	.031	.058		2642-34127-N253	2642-34127-T253	2642-34127-PH253
		.341	.027	.500	.062	.089		2715-34127-N253	2715-34127-T253	2715-34127-PH253
		.341	.027	.562	.031	.058		2644-34127-N253	2644-34127-T253	2644-34127-PH253
		.341	.027	.562	.062	.089		2717-34127-N253	2717-34127-T253	2717-34127-PH253
		.341	.027	.625	.031	.058		2646-34127-N253	2646-34127-T253	2646-34127-PH253
		.341	.027	.625	.062	.089		2718-34127-N253	2718-34127-T253	2718-34127-PH253
		.341	.027	.750	.031	.058		2649-34127-N253	2649-34127-T253	2649-34127-PH253
		.341	.027	.750	.062	.089		2720-34127-N253	2720-34127-T253	2720-34127-PH253
		.341	.050	.468	.031	.081		2641-34150-N253	2641-34150-T253	2641-34150-PH253
		.341	.050	.468	.062	.112		2714-34150-N253	2714-34150-T253	2714-34150-PH253
		.341	.050	.500	.031	.081		2642-34150-N253	2642-34150-T253	2642-34150-PH253
		.341	.050	.500	.062	.112		2715-34150-N253	2715-34150-T253	2715-34150-PH253
		.341	.050	.562	.031	.081		2644-34150-N253	2644-34150-T253	2644-34150-PH253
		.341	.050	.562	.062	.112		2717-34150-N253	2717-34150-T253	2717-34150-PH253
		.341	.050	.625	.031	.081		2646-34150-N253	2646-34150-T253	2646-34150-PH253
		.341	.050	.625	.062	.112		2718-34150-N253	2718-34150-T253	2718-34150-PH253
		.341	.050	.750	.031	.081		2649-34150-N253	2649-34150-T253	2649-34150-PH253
		.341	.050	.750	.062	.112		2720-34150-N253	2720-34150-T253	2720-34150-PH253
		.371	.027	.500	.031	.058		2642-37127-N253	2642-37127-T253	2642-37127-PH253
		.371	.027	.500	.062	.089		2715-37127-N253	2715-37127-T253	2715-37127-PH253

Continued next page

INSULATING SHOULDER WASHERS

SCREW CLEARANCE NO. 1/4

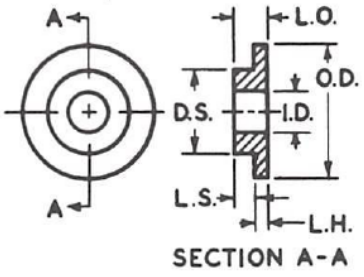

SECTION A-A

TOLERANCES			
I. D.	+.010, -.000	L. H.	±.005
D. S.	+.000, -.010	L. O.	±.005 for .047 - .065 Thick.
L. S.	REF.		±.008 for .075 - .094 Thick.
O. D.	+.015, -.005		±.010 for .095 Thick. & over

Continued from previous page

SCREW SIZE	I. D.	D. S.	L. S.	O. D.	L. H.	L. O.	MATERIAL		
							NYLON (N)	TEFLON (T)	PHENOLIC (PH)
1/4 (.250)	.253	.371	.027	.562	.031	.058	2644-37127-N253	2644-37127-T253	2644-37127-PH253
		.371	.027	.562	.062	.089	2717-37127-N253	2717-37127-T253	2717-37127-PH253
		.371	.027	.625	.031	.058	2646-37127-N253	2646-37127-T253	2646-37127-PH253
		.371	.027	.625	.062	.089	2718-37127-N253	2718-37127-T253	2718-37127-PH253
		.371	.027	.750	.031	.058	2649-37127-N253	2649-37127-T253	2649-37127-PH253
		.371	.027	.750	.062	.089	2720-37127-N253	2720-37127-T253	2720-37127-PH253
		.371	.050	.500	.031	.081	2642-37150-N253	2642-37150-T253	2642-37150-PH253
		.371	.050	.500	.062	.112	2715-37150-N253	2715-37150-T253	2715-37150-PH253
		.371	.050	.562	.031	.081	2644-37150-N253	2644-37150-T253	2644-37150-PH253
		.371	.050	.562	.062	.112	2717-37150-N253	2717-37150-T253	2717-37150-PH253
		.371	.050	.625	.031	.081	2646-37150-N253	2646-37150-T253	2646-37150-PH253
		.371	.050	.625	.062	.112	2718-37150-N253	2718-37150-T253	2718-37150-PH253
		.371	.050	.750	.031	.081	2649-37150-N253	2649-37150-T253	2649-37150-PH253
		.371	.050	.750	.062	.112	2720-37150-N253	2720-37150-T253	2720-37150-PH253
		.432	.027	.562	.031	.058	2644-43227-N253	2644-43227-T253	2644-43227-PH253
		.432	.027	.562	.062	.089	2717-43227-N253	2717-43227-T253	2717-43227-PH253
		.432	.027	.625	.031	.058	2646-43227-N253	2646-43227-T253	2646-43227-PH253
		.432	.027	.625	.062	.089	2718-43227-N253	2718-43227-T253	2718-43227-PH253
		.432	.027	.750	.031	.058	2649-43227-N253	2649-43227-T253	2649-43227-PH253
		.432	.027	.750	.062	.089	2720-43227-N253	2720-43227-T253	2720-43227-PH253
		.432	.050	.562	.031	.081	2644-43250-N253	2644-43250-T253	2644-43250-PH253
		.432	.050	.562	.062	.112	2717-43250-N253	2717-43250-T253	2717-43250-PH253
		.432	.050	.625	.031	.081	2646-43250-N253	2646-43250-T253	2646-43250-PH253
		.432	.050	.625	.062	.112	2718-43250-N253	2718-43250-T253	2718-43250-PH253
		.432	.050	.750	.031	.081	2649-43250-N253	2649-43250-T253	2649-43250-PH253
		.432	.050	.750	.062	.112	2720-43250-N253	2720-43250-T253	2720-43250-PH253
		.495	.027	.562	.031	.058	2644-49527-N253	2644-49527-T253	2644-49527-PH253
		.495	.027	.562	.062	.089	2717-49527-N253	2717-49527-T253	2717-49527-PH253
		.495	.027	.625	.031	.058	2646-49527-N253	2646-49527-T253	2646-49527-PH253
		.495	.027	.625	.062	.089	2718-49527-N253	2718-49527-T253	2718-49527-PH253
		.495	.027	.750	.031	.058	2649-49527-N253	2649-49527-T253	2649-49527-PH253
		.495	.027	.750	.062	.089	2720-49527-N253	2720-49527-T253	2720-49527-PH253
		.495	.050	.562	.031	.081	2644-49550-N253	2644-49550-T253	2644-49550-PH253
		.495	.050	.562	.062	.112	2717-49550-N253	2717-49550-T253	2717-49550-PH253
		.495	.050	.625	.031	.081	2646-49550-N253	2646-49550-T253	2646-49550-PH253
		.495	.050	.625	.062	.112	2718-49550-N253	2718-49550-T253	2718-49550-PH253

Continued next page

5 Pasco Hill Road • Cromwell, CT 06416-1093
Phone: 860-828-0847 • Call Toll Free: 800-243-6032 • Fax: 860-828-0381
Web Address: http://www.amatom.com • E-Mail: sales@amatom.com

INSULATING SHOULDER WASHERS

SCREW CLEARANCE NO. 1/4

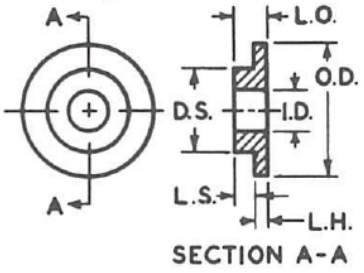

SECTION A-A

TOLERANCES			
I. D.	+.010, -.000	L. H.	±.005
D. S.	+.000, -.010	L. O.	±.005 for .047 - .065 Thick.
L. S.	REF.		±.008 for .075 - .094 Thick.
O. D.	+.015, -.005		±.010 for .095 Thick. & over

Continued from previous page

SCREW SIZE	I. D.	D. S.	L. S.	O. D.	L. H.	L. O.	MATERIAL		
							NYLON (N)	TEFLON (T)	PHENOLIC (PH)
1/4 (.250)	.253	.495	.050	.750	.031	.081	2649-49550-N253	2649-49550-T253	2649-49550-PH253
↓	↓	.495	.050	.750	.062	.112	2720-49550-N253	2720-49550-T253	2720-49550-PH253
	.255	.341	.069	.500	.047	.116	2682-34169-N255	2682-34169-T255	2682-34169-PH255
	.257	.343	.093	.500	.063	.156	2715-34393-N257	2715-34393-T257	2715-34393-PH257
	.258	.375	.031	.500	.063	.094	2715-37531-N258	2715-37531-T258	2715-37531-PH258
	.260	.310	.052	.437	.060	.112	2713-31052-N260	2713-31052-T260	2713-31052-PH260
	↓	.437	.078	.625	.078	.156	2731-43778-N260	2731-43778-T260	2731-43778-PH260
	.266	.365	.032	.500	.062	.094	2715-36532-N266	2715-36532-T266	2715-36532-PH266
	↓	.484	.062	.875	.093	.155	2748-48462-N266	2748-48462-T266	2748-48462-PH266
	.281	.312	.063	.625	.062	.125	2718-31263-N281	2718-31263-T281	2718-31263-PH281
	↓	.500	.063	.750	.062	.125	2720-50063-N281	2720-50063-T281	2720-50063-PH281
		.562	.020	1.000	.125	.145	2768-56220-N281	2768-56220-T281	2768-56220-PH281
	.289	.352	.031	.531	.031	.062	2643-35231-N289	2643-35231-T289	2643-35231-PH289
	.296	.339	.036	.531	.037	.073	2669-33936-N296	2669-33936-T296	2669-33936-PH296
	.305	.437	.032	.750	.125	.157	2765-43732-N305	2765-43732-T305	2765-43732-PH305
	.312	.368	.025	.500	.031	.056	2642-36825-N312	2642-36825-T312	2642-36825-PH312
	.313	.375	.016	.500	.031	.047	2642-37516-N313	2642-37516-T313	2642-37516-PH313
	↓	.437	.032	.500	.062	.094	2715-43732-N313	2715-43732-T313	2715-43732-PH313
		.500	.032	.625	.062	.094	2718-50032-N313	2718-50032-T313	2718-50032-PH313

NOTE: ** Not available machined in Phenolic with L.H. thinner than .031. Can be molded if required. Special order only.

5 Pasco Hill Road • Cromwell, CT 06416-1093
Phone: 860-828-0847 • Call Toll Free: 800-243-6032 • Fax: 860-828-0381
Web Address: http://www.amatom.com • E-Mail: sales@amatom.com

INSULATING SHOULDER WASHERS

SCREW CLEARANCE NO. 5/16

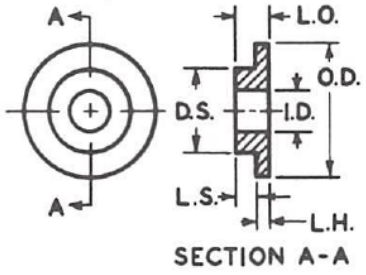

SECTION A-A

TOLERANCES			
I. D.	+.010, -.000	L. H.	±.005
D. S.	+.000, -.010	L. O.	±.005 for .047 - .065 Thick.
L. S.	REF.		±.008 for .075 - .094 Thick.
O. D.	+.015, -.005		±.010 for .095 Thick. & over

SCREW SIZE	I. D.	D. S.	L. S.	O. D.	L. H.	L. O.	MATERIAL		
							NYLON (N)	TEFLON (T)	PHENOLIC (PH)
5/16 (.312)	.317	.371	.027	.500	.031	.058	2642-37127-N317	2642-37127-T317	2642-37127-PH317
		.371	.027	.500	.062	.089	2715-37127-N317	2715-37127-T317	2715-37127-PH317
		.371	.027	.562	.031	.058	2644-37127-N317	2644-37127-T317	2644-37127-PH317
		.371	.027	.562	.062	.089	2717-37127-N317	2717-37127-T317	2717-37127-PH317
		.371	.027	.625	.031	.058	2646-37127-N317	2646-37127-T317	2646-37127-PH317
		.371	.027	.625	.062	.089	2718-37127-N317	2718-37127-T317	2718-37127-PH317
		.371	.027	.750	.031	.058	2649-37127-N317	2649-37127-T317	2649-37127-PH317
		.371	.027	.750	.062	.089	2720-37127-N317	2720-37127-T317	2720-37127-PH317
		.371	.050	.500	.031	.081	2642-37150-N317	2642-37127-T317	2642-37127-PH317
		.371	.050	.500	.062	.112	2715-37150-N317	2715-37150-T317	2715-37150-PH317
		.371	.050	.562	.031	.081	2644-37150-N317	2644-37150-T317	2644-37150-PH317
		.371	.050	.562	.062	.112	2717-37150-N317	2717-37150-T317	2717-37150-PH317
		.371	.050	.625	.031	.081	2646-37150-N317	2646-37150-T317	2646-37150-PH317
		.371	.050	.625	.062	.112	2718-37150-N317	2718-37150-T317	2718-37150-PH317
		.371	.050	.750	.031	.081	2649-37150-N317	2649-37150-T317	2649-37150-PH317
		.371	.050	.750	.062	.112	2720-37150-N317	2720-37150-T317	2720-37150-PH317
		.432	.027	.500	.062	.089	2715-43227-N317	2715-43227-T317	2715-43227-PH317
		.432	.027	.562	.031	.058	2644-43227-N317	2644-43227-T317	2644-43227-PH317
		.432	.027	.562	.062	.089	2717-43227-N317	2717-43227-T317	2717-43227-PH317
		.432	.027	.625	.031	.058	2646-43227-N317	2646-43227-T317	2646-43227-PH317
		.432	.027	.625	.062	.089	2718-43227-N317	2718-43227-T317	2718-43227-PH317
		.432	.027	.750	.031	.058	2649-43227-N317	2649-43227-T317	2649-43227-PH317
		.432	.027	.750	.062	.089	2720-43227-N317	2720-43227-T317	2720-43227-PH317
		.432	.050	.562	.031	.081	2644-43250-N317	2644-43250-T317	2644-43250-PH317
		.432	.050	.562	.062	.112	2717-43250-N317	2717-43250-T317	2717-43250-PH317
		.432	.050	.625	.031	.081	2646-43250-N317	2646-43250-T317	2646-43250-PH317
		.432	.050	.625	.062	.112	2718-43250-N317	2718-43250-T317	2718-43250-PH317
		.432	.050	.750	.031	.081	2649-43250-N317	2649-43250-T317	2649-43250-PH317
		.432	.050	.750	.062	.112	2720-43250-N317	2720-43250-T317	2720-43250-PH317
		.495	.027	.625	.031	.058	2646-49527-N317	2646-49527-T317	2646-49527-PH317
		.495	.027	.625	.062	.089	2718-49527-N317	2718-49527-T317	2718-49527-PH317
		.495	.027	.750	.031	.058	2649-49527-N317	2649-49527-T317	2649-49527-PH317
		.495	.027	.750	.062	.089	2720-49527-N317	2720-49527-T317	2720-49527-PH317
		.495	.050	.625	.031	.081	2646-49550-N317	2646-49550-T317	2646-49527-PH317
		.495	.050	.625	.062	.112	2718-49550-N317	2718-49550-T317	2718-49550-PH317
		.495	.050	.750	.031	.081	2649-49550-N317	2649-49550-T317	2649-49550-PH317

Continued next page

5 Pasco Hill Road • Cromwell, CT 06416-1093
Phone: 860-828-0847 • Call Toll Free: 800-243-6032 • Fax: 860-828-0381
Web Address: http://www.amatom.com • E-Mail: sales@amatom.com

AMATOM®

INSULATING SHOULDER WASHERS

SCREW CLEARANCE NO. 5/16

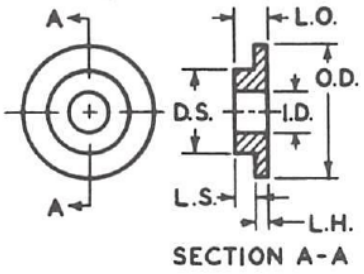

SECTION A-A

TOLERANCES			
I. D.	+.010, -.000	L. H.	±.005
D. S.	+.000, -.010	L. O.	±.005 for .047 - .065 Thick.
L. S.	REF.		±.008 for .075 - .094 Thick.
O. D.	+.015, -.005		±.010 for .095 Thick. & over

Continued from previous page

SCREW SIZE	I. D.	D. S.	L. S.	O. D.	L. H.	L. O.	MATERIAL			
								NYLON (N)	TEFLON (T)	PHENOLIC (PH)
5/16 (.312)	.317	.495	.050	.750	.062	.112		2720-49550-N317	2720-49550-T317	2720-49550-PH317
	.319	.375	.031	.500	.063	.094		2715-37531-N319	2715-37531-T319	2715-37531-PH319
↓	.320	.375	.046	.500	.062	.108		2715-37546-N320	2715-37546-T320	2715-37546-PH320
	.325	.525	.048	.780	.100	.148		2753-52548-N325	2753-52548-T325	2753-52548-PH325
	.343	.562	.020	1.000	.125	.145		2768-56220-N343	2768-56220-T343	2768-56220-PH343
	.345	.470	.040	.625	.062	.102		2718-47040-N345	2718-47040-T345	2718-47040-PH345
	.375	.490	.031	.625	.062	.093		2718-49031-N375	2718-49031-T375	2718-49031-PH375
		.500	.031	.750	.094	.125		2746-50031-N375	2746-50031-T375	2746-50031-PH375
		.500	.031	1.000	.062	.093		2722-50031-N375	2722-50031-T375	2722-50031-PH375
		.500	.032	.750	.062	.094		2720-50032-N375	2720-50032-T375	2720-50032-PH375
		.500	.047	.625	.031	.078		2646-50047-N375	2646-50047-T375	2646-50047-PH375
		.500	.047	.625	.047	.094		2685-50047-N375	2685-50047-T375	2685-50047-PH375
		.500	.063	.687	.093	.156		2744-50063-N375	2744-50063-T375	2744-50063-PH375
↓		.625	.032	1.000	.062	.094		2722-62532-N375	2722-62532-T375	2722-62532-PH375

5 Pasco Hill Road • Cromwell, CT 06416-1093
Phone: 860-828-0847 • Call Toll Free: 800-243-6032 • Fax: 860-828-0381
Web Address: http://www.amatom.com • E-Mail: sales@amatom.com

INSULATING SHOULDER WASHERS

SCREW CLEARANCE NO. 3/8

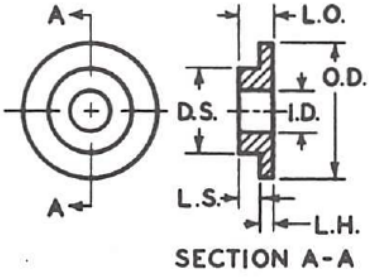

SECTION A-A

TOLERANCES			
I. D.	+.010, -.000	L. H.	±.005
D. S.	+.000, -.010	L. O.	±.005 for .047 - .065 Thick.
L. S.	REF.		±.008 for .075 - .094 Thick.
O. D.	+.015, -.005		±.010 for .095 Thick. & over

SCREW SIZE	I. D.	D. S.	L. S.	O. D.	L. H.	L. O.	MATERIAL			
								NYLON (N)	TEFLON (T)	PHENOLIC (PH)
3/8 (.375)	.380	.437	.031	.625	.031	.062		2646-43731-N380	2646-43731-T380	2646-43731-PH380
		.442	.025	.625	.032	.057		2646-44225-N380	2646-44225-T380	2646-44225-PH380
		.500	.020	.625	.062	.082		2718-50020-N380	2718-50020-T380	2718-50020-PH380
		.558	.040	.812	.093	.133		2747-55840-N380	2747-55840-T380	2747-55840-PH380
	.385	.432	.027	.562	.031	.058		2644-43227-N385	2644-43227-T385	2644-43227-PH385
		.432	.027	.562	.062	.089		2717-43227-N385	2717-43227-T385	2717-43227-PH385
		.432	.027	.625	.031	.058		2646-43227-N385	2646-43227-T385	2646-43227-PH385
		.432	.027	.625	.062	.089		2718-43227-N385	2718-43227-T385	2718-43227-PH385
		.432	.027	.750	.031	.058		2649-43227-N385	2649-43227-T385	2649-43227-PH385
		.432	.027	.750	.062	.089		2720-43227-N385	2720-43227-T385	2720-43227-PH385
		.432	.027	.875	.031	.058		2652-43227-N385	2652-43227-T385	2652-43227-PH385
		.432	.027	.875	.062	.089		2721-43227-N385	2721-43227-T385	2721-43227-PH385
		.432	.027	1.000	.031	.058		2654-43227-N385	2654-43227-T385	2654-43227-PH385
		.432	.027	1.000	.062	.089		2722-43227-N385	2722-43227-T385	2722-43227-PH385
		.432	.050	.562	.031	.081		2644-43250-N385	2644-43250-T385	2644-43250-PH385
		.432	.050	.562	.062	.112		2717-43250-N385	2717-43250-T385	2717-43250-PH385
		.432	.050	.625	.031	.081		2646-43250-N385	2646-43250-T385	2646-43250-PH385
		.432	.050	.625	.062	.112		2718-43250-N385	2718-43250-T385	2718-43250-PH385
		.432	.050	.750	.031	.081		2649-43250-N385	2649-43250-T385	2649-43250-PH385
		.432	.050	.750	.062	.112		2720-43250-N385	2720-43250-T385	2720-43250-PH385
		.432	.050	.875	.031	.081		2652-43250-N385	2652-43250-T385	2652-43250-PH385
		.432	.050	.875	.062	.112		2721-43250-N385	2721-43250-T385	2721-43250-PH385
		.432	.050	1.000	.031	.081		2654-43250-N385	2654-43250-T385	2654-43250-PH385
		.432	.050	1.000	.062	.112		2722-43250-N385	2722-43250-T385	2722-43250-PH385
		.495	.027	.625	.031	.058		2646-49527-N385	2646-49527-T385	2646-49527-PH385
		.495	.027	.625	.062	.089		2718-49527-N385	2718-49527-T385	2718-49527-PH385
		.495	.027	.750	.031	.058		2649-49527-N385	2649-49527-T385	2649-49527-PH385
		.495	.027	.750	.062	.089		2720-49527-N385	2720-49527-T385	2720-49527-PH385
		.495	.027	.875	.031	.058		2652-49527-N385	2652-49527-T385	2652-49527-PH385
		.495	.027	.875	.062	.089		2721-49527-N385	2721-49527-T385	2721-49527-PH385
		.495	.027	1.000	.031	.058		2654-49527-N385	2654-49527-T385	2654-49527-PH385
		.495	.027	1.000	.062	.089		2722-49527-N385	2722-49527-T385	2722-49527-PH385
		.495	.050	.625	.031	.081		2646-49550-N385	2646-49550-T385	2646-49550-PH385
		.495	.050	.625	.062	.112		2718-49550-N385	2718-49550-T385	2718-49550-PH385
		.495	.050	.750	.031	.081		2649-49550-N385	2649-49550-T385	2649-49550-PH385
		.495	.050	.750	.062	.112		2720-49550-N385	2720-49550-T385	2720-49550-PH385

Continued next page

5 Pasco Hill Road • Cromwell, CT 06416-1093
Phone: 860-828-0847 • Call Toll Free: 800-243-6032 • Fax: 860-828-0381
Web Address: http://www.amatom.com • E-Mail: sales@amatom.com

INSULATING SHOULDER WASHERS

SCREW CLEARANCE NO. 3/8

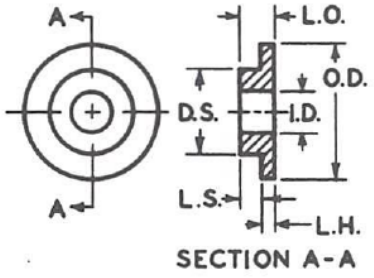

SECTION A-A

TOLERANCES			
I. D.	+.010, -.000	L. H.	±.005
D. S.	+.000, -.010	L. O.	±.005 for .047 - .065 Thick.
L. S.	REF.		±.008 for .075 - .094 Thick.
O. D.	+.015, -.005		±.010 for .095 Thick. & over

Continued from previous page

SCREW SIZE	I. D.	D. S.	L. S.	O. D.	L. H.	L. O.	MATERIAL			
								NYLON (N)	TEFLON (T)	PHENOLIC (PH)
3/8 (.375)	.385	.495	.050	.875	.031	.081		2652-49550-N385	2652-49550-T385	2652-49550-PH385
		.495	.050	.875	.062	.112		2721-49550-N385	2721-49550-T385	2721-49550-PH385
		.495	.050	1.000	.031	.081		2654-49550-N385	2654-49550-T385	2654-49550-PH385
		.495	.050	1.000	.062	.112		2722-49550-N385	2722-49550-T385	2722-49550-PH385
		.500	.032	.625	.062	.094		2718-50032-N385	2718-50032-T385	2718-50032-PH385
		.556	.027	.750	.031	.058		2649-55627-N385	2649-55627-T385	2649-55627-PH385
		.556	.027	.750	.062	.089		2720-55627-N385	2720-55627-T385	2720-55627-PH385
		.556	.027	.875	.031	.058		2652-55627-N385	2652-55627-T385	2652-55627-PH385
		.556	.027	.875	.062	.089		2721-55627-N385	2721-55627-T385	2721-55627-PH385
		.556	.027	1.000	.031	.058		2654-55627-N385	2654-55627-T385	2654-55627-PH385
		.556	.027	1.000	.062	.089		2722-55627-N385	2722-55627-T385	2722-55627-PH385
		.556	.050	.750	.031	.081		2649-55650-N385	2649-55650-T385	2649-55650-PH385
		.556	.050	.750	.062	.112		2720-55650-N385	2720-55650-T385	2720-55650-PH385
		.556	.050	.875	.031	.081		2652-55650-N385	2652-55650-T385	2652-55650-PH385
		.556	.050	.875	.062	.112		2721-55650-N385	2721-55650-T385	2721-55650-PH385

Continued next page

5 Pasco Hill Road • Cromwell, CT 06416-1093
Phone: 860-828-0847 • Call Toll Free: 800-243-6032 • Fax: 860-828-0381
Web Address: http://www.amatom.com • E-Mail: sales@amatom.com

INSULATING SHOULDER WASHERS

SCREW CLEARANCE NO. 3/8

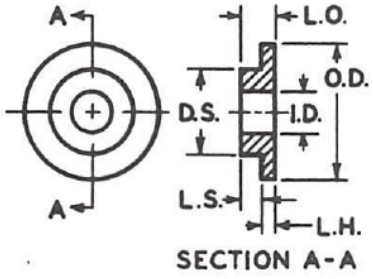

SECTION A-A

TOLERANCES			
I. D.	+.010, -.000	L. H.	±.005
D. S.	+.000, -.010	L. O.	±.005 for .047 - .065 Thick.
L. S.	REF.		±.008 for .075 - .094 Thick.
O. D.	+.015, -.005		±.010 for .095 Thick. & over

Continued from previous page

SCREW SIZE	I. D.	D. S.	L. S.	O. D.	L. H.	L. O.	MATERIAL			
								NYLON (N)	TEFLON (T)	PHENOLIC (PH)
3/8 (.375)	.385	.556	.050	1.000	.031	.081		2654-55650-N385	2654-55650-T385	2654-55650-PH385
		.556	.050	1.000	.062	.112		2722-55650-N385	2722-55650-T385	2722-55650-PH385
		.562	.030	.687	.125	.155		2763-56230-N385	2763-56230-T385	2763-56230-PH385
		.616	.027	.750	.031	.058		2649-61627-N385	2649-61627-T385	2649-61627-PH385
		.616	.027	.750	.062	.089		2720-61627-N385	2720-61627-T385	2720-61627-PH385
		.616	.027	.875	.031	.058		2652-61627-N385	2652-61627-T385	2652-61627-PH385
		.616	.027	.875	.062	.089		2721-61627-N385	2721-61627-T385	2721-61627-PH385
		.616	.027	1.000	.031	.058		2654-61627-N385	2654-61627-T385	2654-61627-PH385
		.616	.027	1.000	.062	.089		2722-61627-N385	2722-61627-T385	2722-61627-PH385
		.616	.050	.750	.031	.081		2649-61650-N385	2649-61650-T385	2649-61650-PH385
		.616	.050	.750	.062	.112		2720-61650-N385	2720-61650-T385	2720-61650-PH385
		.616	.050	.875	.031	.081		2652-61650-N385	2652-61650-T385	2652-61650-PH385
		.616	.050	.875	.062	.112		2721-61650-N385	2721-61650-T385	2721-61650-PH385
		.616	.050	1.000	.031	.081		2654-61650-N385	2654-61650-T385	2654-61650-PH385
		.616	.050	1.000	.062	.112		2722-61650-N385	2722-61650-T385	2722-61650-PH385
	.386	.443	.050	.562	.031	.081		2644-44350-N386	2644-44350-T386	2644-44350-PH386
		.484	.046	.688	.031	.077		2647-48446-N386	2647-48446-T386	2647-48446-PH386
	.406	.500	.031	.625	.031	.062		2646-50031-N406	2646-50031-T406	2646-50031-PH406
	.409	.574	.085	.625	.050	.135		2697-57485-N409	2697-57485-T409	2697-57485-PH409
	.437	.498	.047	.625	.031	.078		2646-49847-N437	2646-49847-T437	2646-49847-PH437
		.562	.031	.750	.062	.093		2720-56231-N437	2720-56231-T437	2720-56231-PH437

5 Pasco Hill Road • Cromwell, CT 06416-1093
Phone: 860-828-0847 • Call Toll Free: 800-243-6032 • Fax: 860-828-0381
Web Address: http://www.amatom.com • E-Mail: sales@amatom.com

AMATOM®

INSULATING SHOULDER WASHERS

SCREW CLEARANCE NO. 7/16

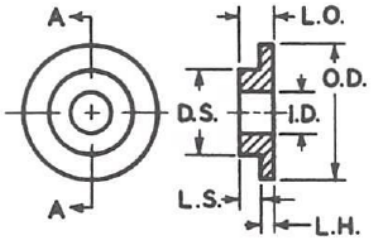

SECTION A-A

TOLERANCES			
I. D.	+.010, -.000	L. H.	±.005
D. S.	+.000, -.010	L. O.	±.005 for .047 - .065 Thick.
L. S.	REF.		±.008 for .075 - .094 Thick.
O. D.	+.015, -.005		±.010 for .095 Thick. & over

SCREW SIZE	I. D.	D. S.	L. S.	O. D.	L. H.	L. O.	MATERIAL		
							NYLON (N)	TEFLON (T)	PHENOLIC (PH)
7/16 (.437)	.443	.495	.027	.625	.031	.058	2646-49527-N443	2646-49527-T443	2646-49527-PH443
		.495	.027	.625	.062	.089	2718-49527-N443	2718-49527-T443	2718-49527-PH443
		.495	.027	.750	.031	.058	2649-49527-N443	2649-49527-T443	2649-49527-PH443
		.495	.027	.750	.062	.089	2720-49527-N443	2720-49527-T443	2720-49527-PH443
		.495	.027	.875	.031	.058	2652-49527-N443	2652-49527-T443	2652-49527-PH443
		.495	.027	.875	.062	.089	2721-49527-N443	2721-49527-T443	2721-49527-PH443
		.495	.027	1.000	.031	.058	2654-49527-N443	2654-49527-T443	2654-49527-PH443
		.495	.027	1.000	.062	.089	2722-49527-N443	2722-49527-T443	2722-49527-PH443
		.495	.050	.625	.031	.081	2646-49550-N443	2646-49550-T443	2646-49550-PH443
		.495	.050	.625	.062	.112	2718-49550-N443	2718-49550-T443	2718-49550-PH443
		.495	.050	.750	.031	.081	2649-49550-N443	2649-49550-T443	2649-49550-PH443
		.495	.050	.750	.062	.112	2720-49550-N443	2720-49550-T443	2720-49550-PH443
		.495	.050	.875	.031	.081	2652-49550-N443	2652-49550-T443	2652-49550-PH443
		.495	.050	.875	.062	.112	2721-49550-N443	2721-49550-T443	2721-49550-PH443
		.495	.050	1.000	.031	.081	2654-49550-N443	2654-49550-T443	2654-49550-PH443
		.495	.050	1.000	.062	.112	2722-49550-N443	2722-49550-T443	2722-49550-PH443
		.556	.027	.750	.031	.058	2649-55627-N443	2649-55627-T443	2649-55627-PH443
		.556	.027	.750	.062	.089	2720-55627-N443	2720-55627-T443	2720-55627-PH443
		.556	.027	.875	.031	.058	2652-55627-N443	2652-55627-T443	2652-55627-PH443
		.556	.027	.875	.062	.089	2721-55627-N443	2721-55627-T443	2721-55627-PH443
		.556	.027	1.000	.031	.058	2654-55627-N443	2654-55627-T443	2654-55627-PH443
		.556	.027	1.000	.062	.089	2722-55627-N443	2722-55627-T443	2722-55627-PH443
		.556	.050	.750	.031	.081	2649-55650-N443	2649-55650-T443	2649-55650-PH443
		.556	.050	.750	.062	.112	2720-55650-N443	2720-55650-T443	2720-55650-PH443
		.556	.050	.875	.031	.081	2652-55650-N443	2652-55650-T443	2652-55650-PH443
		.556	.050	.875	.062	.112	2721-55650-N443	2721-55650-T443	2721-55650-PH443
		.556	.050	1.000	.031	.081	2654-55650-N443	2654-55650-T443	2654-55650-PH443
		.556	.050	1.000	.062	.112	2722-55650-N443	2722-55650-T443	2722-55650-PH443
		.616	.027	.750	.031	.058	2649-61627-N443	2649-61627-T443	2649-61627-PH443
		.616	.027	.750	.062	.089	2720-61627-N443	2720-61627-T443	2720-61627-PH443
		.616	.027	.875	.031	.058	2652-61627-N443	2652-61627-T443	2652-61627-PH443
		.616	.027	.875	.062	.089	2721-61627-N443	2721-61627-T443	2721-61627-PH443
		.616	.027	1.000	.031	.058	2654-61627-N443	2654-61627-T443	2654-61627-PH443
		.616	.027	1.000	.062	.089	2722-61627-N443	2722-61627-T443	2722-61627-PH443
		.616	.050	.750	.031	.081	2649-61650-N443	2649-61650-T443	2649-61650-PH443
		.616	.050	.750	.062	.112	2720-61650-N443	2720-61650-T443	2720-61650-PH443

Continued next page

5 Pasco Hill Road • Cromwell, CT 06416-1093
Phone: 860-828-0847 • Call Toll Free: 800-243-6032 • Fax: 860-828-0381
Web Address: http://www.amatom.com • E-Mail: sales@amatom.com

INSULATING SHOULDER WASHERS

SCREW CLEARANCE NO. 7/16, 1/2

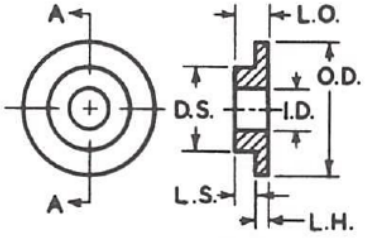

SECTION A-A

TOLERANCES			
I. D.	+.010, -.000	L. H.	±.005
D. S.	+.000, -.010	L. O.	±.005 for .047 - .065 Thick.
L. S.	REF.		±.008 for .075 - .094 Thick.
O. D.	+.015, -.005		±.010 for .095 Thick. & over

Continued from previous page

SCREW SIZE	I. D.	D. S.	L. S.	O. D.	L. H.	L. O.	MATERIAL	NYLON (N)	TEFLON (T)	PHENOLIC (PH)
7/16 (.437)	.443	.616	.050	.875	.031	.081		2652-61650-N443	2652-61650-T443	2652-61650-PH443
		.616	.050	.875	.062	.112		2721-61650-N443	2721-61650-T443	2721-61650-PH443
		.616	.050	1.000	.031	.081		2654-61650-N443	2654-61650-T443	2654-61650-PH443
		.616	.050	1.000	.062	.112		2722-61650-N443	2722-61650-T443	2722-61650-PH443
	.505	.562	.025	.750	.062	.087		2720-56225-N505	2720-56225-T505	2720-56225-PH505
		.750	.032	1.000	.062	.094		2722-75032-N505	2722-75032-T505	2722-75032-PH505
		.569	.032	.875	.032	.064		2652-56932-N505	2652-56932-T505	2652-56932-PH505
	.508	.560	.030	.890	.040	.070		2674-56030-N508	2674-56030-T508	2674-56030-PH508
1/2 (.500)	.515	.556	.027	.750	.062	.089		2720-55627-N515	2720-55627-T515	2720-55627-PH515
		.556	.027	.750	.093	.120		2746-55627-N515	2746-55627-T515	2746-55627-PH515
		.556	.027	.875	.062	.089		2721-55627-N515	2721-55627-T515	2721-55627-PH515
		.556	.027	.875	.093	.120		2748-55627-N515	2748-55627-T515	2748-55627-PH515
		.556	.027	1.000	.062	.089		2722-55627-N515	2722-55627-T515	2722-55627-PH515
		.556	.027	1.000	.093	.120		2749-55627-N515	2749-55627-T515	2749-55627-PH515
		.556	.050	.750	.062	.112		2720-55650-N515	2720-55650-T515	2720-55650-PH515
		.556	.050	.750	.093	.143		2746-55650-N515	2746-55650-T515	2746-55650-PH515
		.556	.050	.875	.062	.112		2721-55650-N515	2721-55650-T515	2721-55650-PH515
		.556	.050	.875	.093	.143		2748-55650-N515	2748-55650-T515	2748-55650-PH515
		.556	.050	1.000	.062	.112		2722-55650-N515	2722-55650-T515	2722-55650-PH515
		.556	.050	1.000	.093	.143		2749-55650-N515	2749-55650-T515	2749-55650-PH515
		.616	.027	.750	.062	.089		2720-61627-N515	2720-61627-T515	2720-61627-PH515
		.616	.027	.750	.093	.120		2746-61627-N515	2746-61627-T515	2746-61627-PH515
		.616	.027	.875	.062	.089		2721-61627-N515	2721-61627-T515	2721-61627-PH515
		.616	.027	.875	.093	.120		2748-61627-N515	2748-61627-T515	2748-61627-PH515
		.616	.027	1.000	.062	.089		2722-61627-N515	2722-61627-T515	2722-61627-PH515
		.616	.027	1.000	.093	.120		2749-61627-N515	2749-61627-T515	2749-61627-PH515
		.616	.050	.750	.062	.112		2720-61650-N515	2720-61650-T515	2720-61650-PH515
		.616	.050	.750	.093	.143		2746-61650-N515	2746-61650-T515	2746-61650-PH515
		.616	.050	.875	.062	.112		2721-61650-N515	2721-61650-T515	2721-61650-PH515
		.616	.050	.875	.093	.143		2748-61650-N515	2748-61650-T515	2748-61650-PH515
		.616	.050	1.000	.062	.112		2722-61650-N515	2722-61650-T515	2722-61650-PH515
		.616	.050	1.000	.093	.143		2749-61650-N515	2749-61650-T515	2749-61650-PH515
	.520	.562	.055	.734	.062	.117		2719-56255-N520	2719-56255-T520	2719-56255-PH515
	.562	.687	.094	.875	.062	.156		2721-68794-N562	2721-68794-T562	2721-68794-PH562

5 Pasco Hill Road • Cromwell, CT 06416-1093
Phone: 860-828-0847 • Call Toll Free: 800-243-6032 • Fax: 860-828-0381
Web Address: http://www.amatom.com • E-Mail: sales@amatom.com

AMATOM®

INSULATING SHOULDER WASHERS

SCREW CLEARANCE NO. 9/16

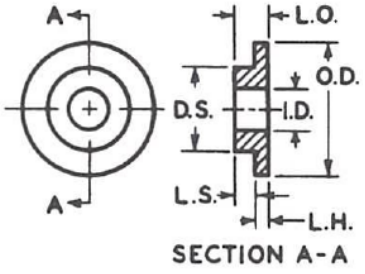

SECTION A-A

TOLERANCES			
I. D.	+.010, -.000	L. H.	±.005
D. S.	+.000, -.010	L. O.	±.005 for .047 - .065 Thick.
L. S.	REF.		±.008 for .075 - .094 Thick.
O. D.	+.015, -.005		±.010 for .095 Thick. & over

SCREW SIZE	I. D.	D. S.	L. S.	O. D.	L. H.	L. O.	MATERIAL		
							NYLON (N)	TEFLON (T)	PHENOLIC (PH)
9/16 (.562)	.569	.616	.050	.750	.062	.112	2720-61650-N569	2720-61650-T569	2720-61650-PH569
		.616	.050	.750	.093	.143	2746-61650-N569	2746-61650-T569	2746-61650-PH569
		.616	.050	.875	.062	.112	2721-61650-N569	2721-61650-T569	2721-61650-PH569
		.616	.050	.875	.093	.143	2748-61650-N569	2748-61650-T569	2748-61650-PH569
		.616	.050	1.000	.062	.112	2722-61650-N569	2722-61650-T569	2722-61650-PH569
		.616	.050	1.000	.093	.143	2749-61650-N569	2749-61650-T569	2749-61650-PH569
		.616	.050	1.125	.062	.112	2723-61650-N569	2723-61650-T569	2723-61650-PH569
		.616	.050	1.125	.093	.143	2750-61650-N569	2750-61650-T569	2750-61650-PH569
		.616	.050	1.250	.062	.112	2724-61650-N569	2724-61650-T569	2724-61650-PH569
		.616	.050	1.250	.093	.143	2751-61650-N569	2751-61650-T569	2751-61650-PH569
	.625	.687	.063	.875	.062	.125	2721-68763-N625	2721-68763-T625	2721-68763-PH625
	.671	.750	.062	1.000	.062	.124	2722-75062-N671	2722-75062-T671	2722-75062-PH671
	.750	.875	.024	1.250	.062	.086	2724-87524-N750	2724-87524-T750	2724-87524-PH750
	.765	.859	.020	1.500	.060	.080	2725-85920-N765	2725-85920-T765	2725-85920-PH765
		.875	.031	1.125	.094	.125	2750-87531-N765	2750-87531-T765	2750-87531-PH765

5 Pasco Hill Road • Cromwell, CT 06416-1093
Phone: 860-828-0847 • Call Toll Free: 800-243-6032 • Fax: 860-828-0381
Web Address: http://www.amatom.com • E-Mail: sales@amatom.com

PANEL BUSHINGS

PANEL BUSHINGS

- MATERIAL - BRASS - 1/2 HARD QQ-B-626
- ALUMINUM QQ-A-225
- FINISH - BRASS - NICKEL PLATE
- ALUMINUM - SUPPLIED PLAIN. IF FINISH IS REQUIRED, SEE CHART ON FINISHES IN OTHER SECTIONS OF MANUAL.
- THESE BEARINGS ARE USEFUL IN MOUNTING SHAFTS THROUGH PANELS - SUCH AS CONDENSER SHAFTS, POTENTIOMETER SHAFTS, ETC.
- THESE BUSHINGS ARE DESIGNED TO ACCOMMODATE STANDARD 1/8" - 1/4"
- MAY BE USED WITH INTERNAL TOOTH LOCKWASHERS FOR LOCK FIT.
- FOR INSULATED MOUNTING OF METAL PANEL BUSHINGS, CAN BE SUPPLIED WITH INSULATED FLAT AND SHOULDER WASHERS.

TYPE 1

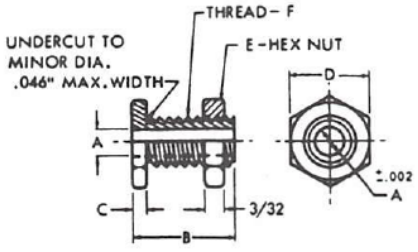

SUPPLIED WITH A NUT.

PART NUMBERS		SHAFT						THREAD	NUT
BRASS (B)	ALUM. (A)	SIZE	A	B	C	D	E	F	
488-B	488-A	1/4	.254	7/16	1/16	1/2	---	3/8-32	499
489-B	489-A	1/4	.254	11/32	1/16	1/2	---	3/8-32	
490-B	490-A	1/4	.254	1/2	1/16	7/16	1/2	3/8-32	
491-B	491-A	1/4	.254	11/16	1/8	1/2	---	3/8-32	
500-B	500-A	1/8	.129	5/16	1/16	3/8	3/8	1/4-32	498
502-B	502-A	1/8	.129	7/16	1/16	3/8	3/8	1/4-32	
504-B	504-A	1/8	.129	9/16	1/16	3/8	3/8	1/4-32	
506-B	506-A	1/4	.254	3/8	1/16	1/2	1/2	3/8-32	499
508-B	508-A	1/4	.254	1/2	1/16	1/2	1/2	3/8-32	
510-B	510-A	1/4	.254	5/8	1/16	1/2	1/2	3/8-32	
512-B	512-A	1/4	.254	3/4	1/16	1/2	1/2	3/8-32	

PANEL BUSHING - Potentiometer

- PART NO. - 580
- MATERIAL - BRASS QQ-B-626
- FINISH - NICKEL PLATE
- TOLERANCE - DECIMALS ± .005, FRACTIONS ± 1/64
- SUPPLIED WITH 1/2-24 HEX NUT

TYPICAL APPLICATION

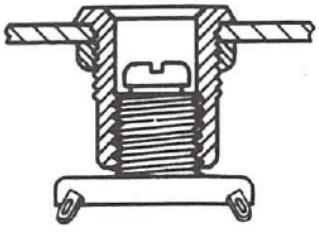

POTENTIOMETER

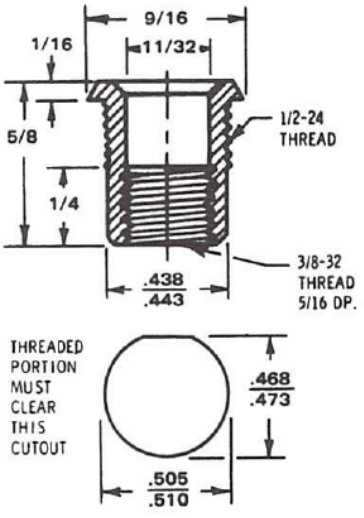

MOUNTING CUTOUT

5 Pasco Hill Road • Cromwell, CT 06416-1093
Phone: 860-828-0847 • Call Toll Free: 800-243-6032 • Fax: 860-828-0381
Web Address: http://www.amatom.com • E-Mail: sales@amatom.com

AMATOM®



LIGHT AND MEDIUM DUTY PULL DOWN CATCHES
HOOKED LOOP CATCHES
HEAVY DUTY PULL DOWN CATCHES
SPRING HOOK CATCHES
COMPRESSION SPRING PULL DOWN CATCHES
HEAVY DUTY HANDLES

CATCHES & HEAVY DUTY HANDLES

Call Toll Free

From anywhere in the USA Call Cromwell, CT **1-800-243-6032**

AMATOM ELECTRONIC HARDWARE
5 Pasco Hill Road
Cromwell, CT 06416-1093
860-828-0847
Fax: 860-828-0381
E-Mail: sales@amatom.com
Web Address: http://www.amatom.com

CATCHES

Catch part number ordering system . . . . . .Page 242

LIGHT AND MEDIUM DUTY PULL DOWN CATCHES

Series 2000 . . . . . .Page 243
Series 2010 . . . . . .Page 243
Series 2040 . . . . . .Page 244
Series 2210 . . . . . .Page 251
Series 2215 . . . . . .Page 251
Series 2230 . . . . . .Page 252
Series 2240 . . . . . .Page 252
Series 2245 . . . . . .Page 252
Series 2270 . . . . . .Page 253
Series 2275 . . . . . .Page 253

HOOKED LOOP CATCHES

Series 2041 . . . . . .Page 245
Series 2042 . . . . . .Page 245
Series 2043 . . . . . .Page 246
Series 2044 . . . . . .Page 246
Series 2100 . . . . . .Page 250
Series 2200 . . . . . .Page 250
Series 2273 . . . . . .Page 254

HEAVY DUTY PULL DOWN CATCHES

Series 2050 . . . . . .Page 247
Series 2060 . . . . . .Page 248
Series 2070 . . . . . .Page 248
Series 2080 . . . . . .Page 249
Series 2090 . . . . . .Page 249

SPRING HOOK CATCHES

Series 3600 . . . . . .Page 258
Series 3700 . . . . . .Page 258
Series 4000 . . . . . .Page 259
Series 4010 . . . . . .Page 259
Series 4040 . . . . . .Page 260
Series 4050 . . . . . .Page 260
Series 4100 . . . . . .Page 261
Series 4150 . . . . . .Page 261

5 Pasco Hill Road • Cromwell, CT 06416-1093
Phone: 860-828-0847 • Call Toll Free: 800-243-6032 • Fax: 860-828-0381
Web Address: http://www.amatom.com • E-Mail: sales@amatom.com

Table of Contents

CATCHES (cont.)

COMPRESSION SPRING PULL DOWN CATCHES

Series 2045 . . . . . Page 244
Series 2055 . . . . . Page 247
Series 2250 . . . . . Page 253
Series 2280 . . . . . Page 254
Series 3000 . . . . . Page 255
Series 3400 . . . . . Page 255
Series 3500 . . . . . Page 256
Series 3510 . . . . . Page 256
Series 3520 . . . . . Page 256
Series 3530 . . . . . Page 257
Series 3540 . . . . . Page 257

HEAVY DUTY HANDLES

Heavy duty handle part number ordering system . . . . Page 262

HEAVY DUTY HANDLES

Series 7000 . . . . . Page 263
Series 8000 . . . . . Page 264
Series 9000 . . . . . Page 265

TOLERANCES

PROCESS	.XXX	.XX	FRACTIONS	ANGLES
FABRICATING	+/- 1/64	+/- 1/64	+/- 1/32	+/- 3°
MACHINING	+/- .005	+/- .010	+/- 1/64	+/- 1°

5 Pasco Hill Road • Cromwell, CT 06416-1093
Phone: 860-828-0847 • Call Toll Free: 800-243-6032 • Fax: 860-828-0381
Web Address: http://www.amatom.com • E-Mail: sales@amatom.com

AMATOM®

CATCH PART NUMBER ORDERING SYSTEM



5 Pasco Hill Road • Cromwell, CT 06416-1093
Phone: 860-828-0847 • Call Toll Free: 800-243-6032 • Fax: 860-828-0381
Web Address: http://www.amatom.com • E-Mail: sales@amatom.com

AMATOM®

SERIES 2000 2010

FINISH

PL	PLAIN
ZN	ZINC
NI	NICKEL
BX	BLACK OXIDE
PS	PASSIVATE
CA	CLEAR ALODINE

MATERIAL

CR	COLD ROLLED
SS	STAINLESS STEEL
AL	ALUMINUM WITH SS LOOP

MOUNTING OPTIONS

B	NO HOLES
H	HOLES

STANDARD HOLE SIZES
.130 DIA HOLE
.144 DIA HOLE
.156 DIA HOLE
XXX NO HOLE

SERIES 2000



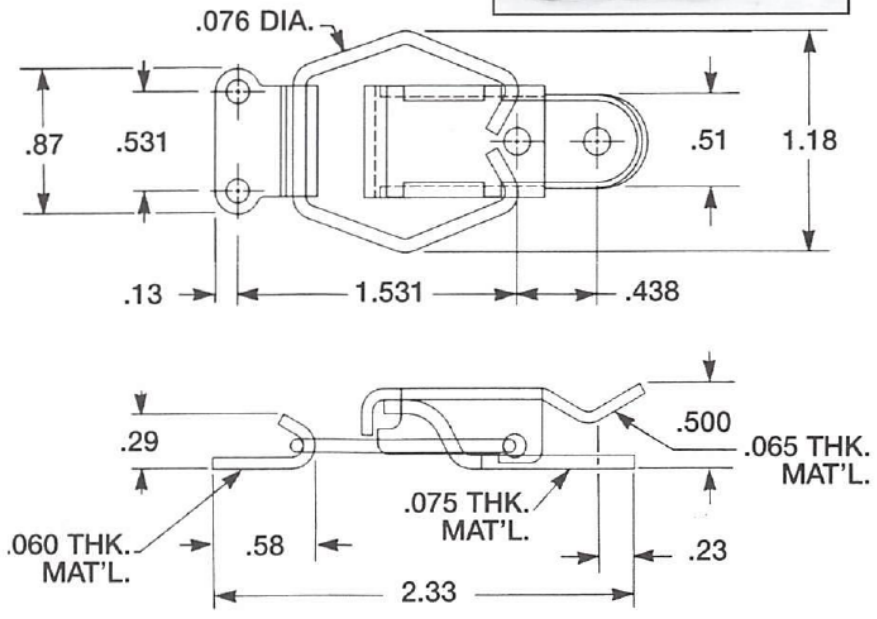

SERIES 2010

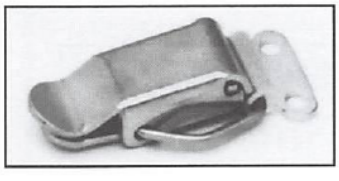

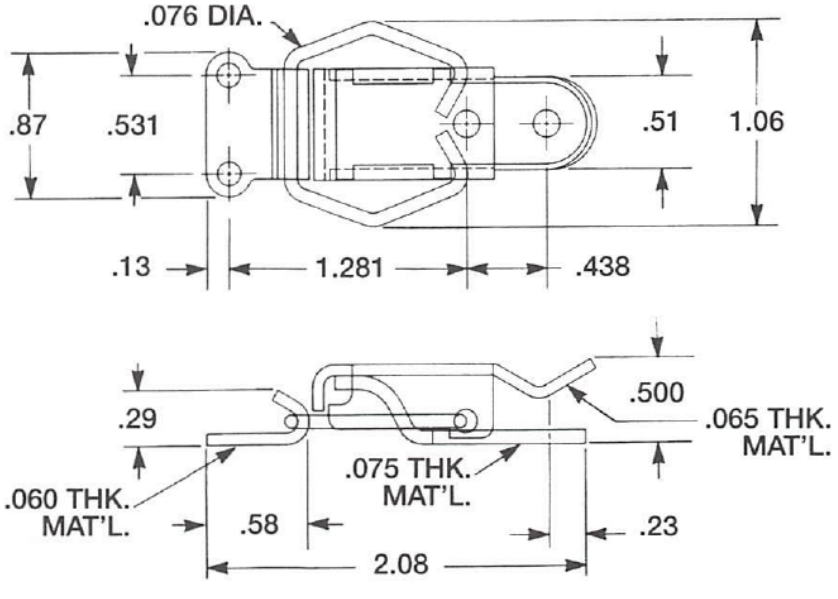

CATCHES

5 Pasco Hill Road • Cromwell, CT 06416-1093
Phone: 860-828-0847 • Call Toll Free: 800-243-6032 • Fax: 860-828-0381
Web Address: http://www.amatom.com • E-Mail: sales@amatom.com

AMATOM®

SERIES 2040 2045

FINISH

PL	PLAIN
ZN	ZINC
NI	NICKEL
BX	BLACK OXIDE
PS	PASSIVATE
LQ	LACQUERED

MATERIAL

CR	COLD ROLLED
SS	STAINLESS STEEL
BR	BRASS

MOUNTING OPTIONS

B	NO HOLES
H	HOLES

STANDARD HOLE SIZES
.130 DIA HOLE
.144 DIA HOLE
.156 DIA HOLE
XXX NO HOLE

1. SERIES 2045 PRELOADED TO 30 POUNDS WHEN MOUNTED AS SPECIFIED.
2. TENSION EQUALS 50 LBS. (1/8" DEFLECTION)
3. CONFORMS TO MILITARY SPECIFICATIONS.

SERIES 2040

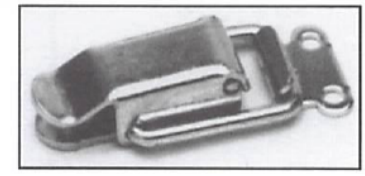

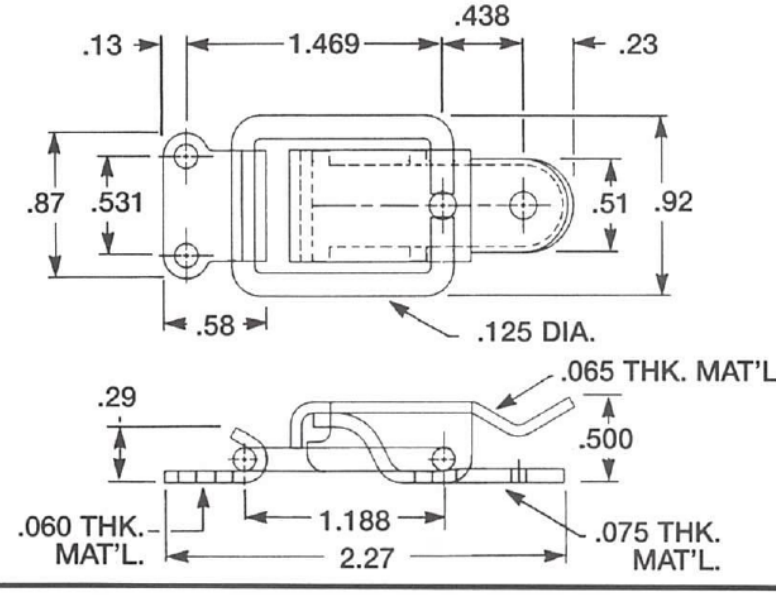

COMPRESSION SPRING PULL DOWN CATCHES

SERIES 2045

NOT AVAILABLE IN BRASS

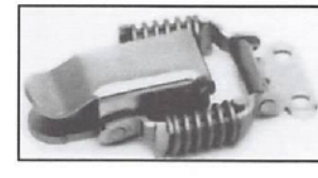

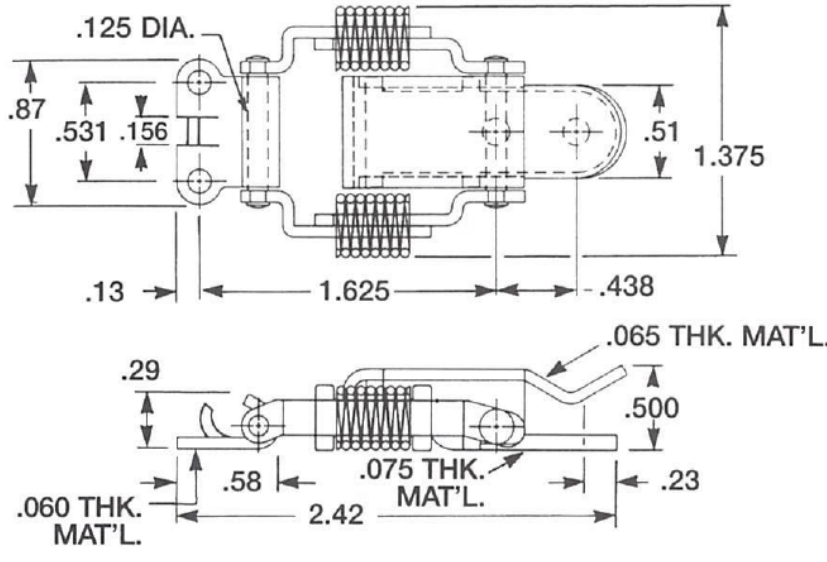

5 Pasco Hill Road • Cromwell, CT 06416-1093
Phone: 860-828-0847 • Call Toll Free: 800-243-6032 • Fax: 860-828-0381
Web Address: http://www.amatom.com • E-Mail: sales@amatom.com

SERIES 2041 2042

FINISH

PL	PLAIN
ZN	ZINC
NI	NICKEL
PT	PAINT
BX	BLACK OXIDE
PS	PASSIVATE

MATERIAL

CR	COLD ROLLED
SS	STAINLESS STEEL

MOUNTING OPTIONS

B	NO HOLES
H	HOLES

STANDARD HOLE SIZES
.130 DIA HOLE
.144 DIA HOLE
.156 DIA HOLE
XXX NO HOLE

SERIES 2041

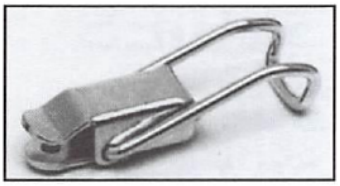

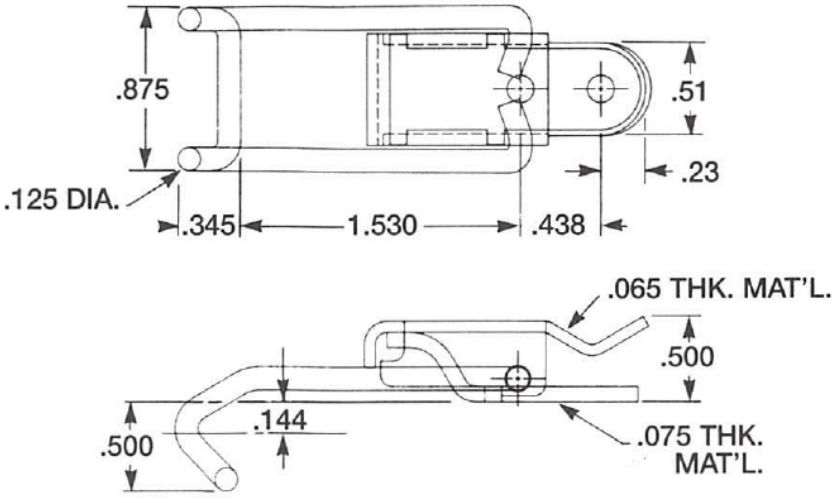

SERIES 2042

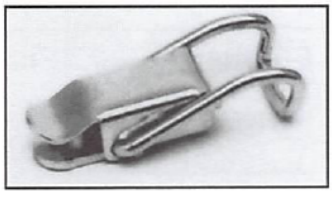

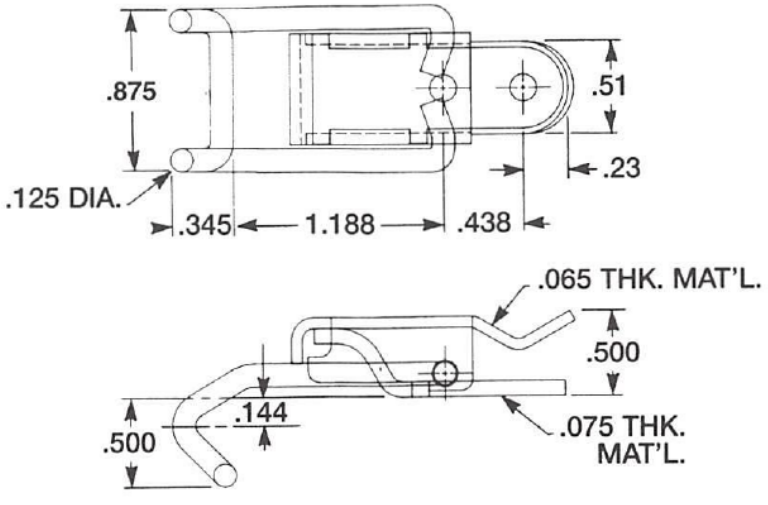

5 Pasco Hill Road • Cromwell, CT 06416-1093
Phone: 860-828-0847 • Call Toll Free: 800-243-6032 • Fax: 860-828-0381
Web Address: http://www.amatom.com • E-Mail: sales@amatom.com

AMATOM®

SERIES 2043 2044

FINISH

PL	PLAIN
ZN	ZINC
NI	NICKEL
PT	PAINT
BX	BLACK OXIDE
PS	PASSIVATE

MATERIAL

CR	COLD ROLLED
SS	STAINLESS STEEL

MOUNTING OPTIONS

B	NO HOLES
H	HOLES

STANDARD HOLE SIZES
.130 DIA HOLE
.144 DIA HOLE
.156 DIA HOLE

SERIES 2043

CARBON STEEL WIRE BAIL

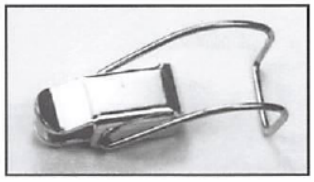

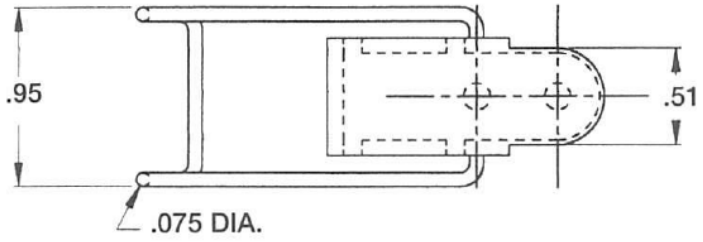

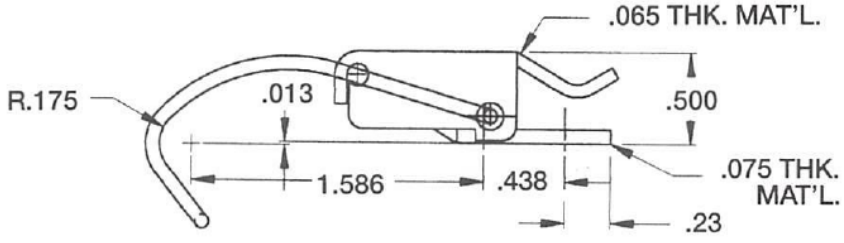

SERIES 2044

STAINLESS STEEL WIRE BAIL

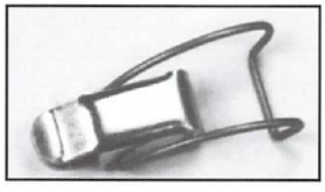

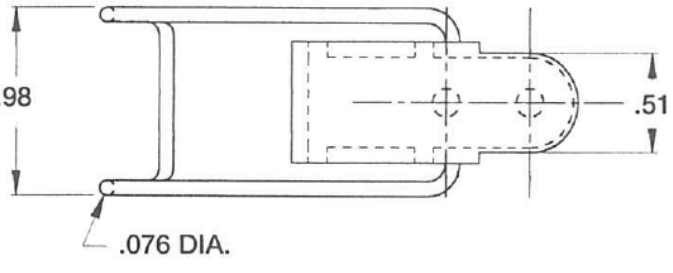

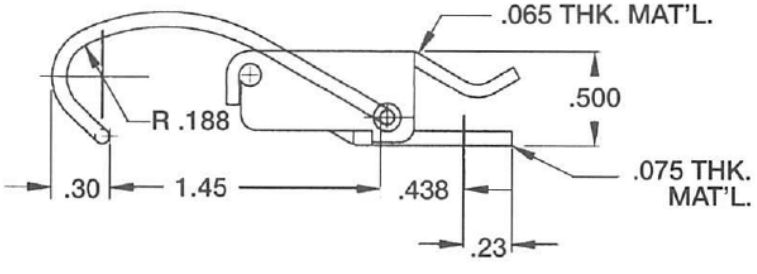

5 Pasco Hill Road • Cromwell, CT 06416-1093
Phone: 860-828-0847 • Call Toll Free: 800-243-6032 • Fax: 860-828-0381
Web Address: http://www.amatom.com • E-Mail: sales@amatom.com

SERIES 2050 2055

FINISH

PL	PLAIN
ZN	ZINC
NI	NICKEL
BX	BLACK OXIDE
PS	PASSIVATE
LQ	LACQUERED

MATERIAL

CR	COLD ROLLED
SS	STAINLESS STEEL
BR	BRASS

MOUNTING OPTIONS

B	NO HOLES
H	HOLES

STANDARD HOLE SIZES
.218 DIA HOLE
XXX NO HOLE

SERIES 2050

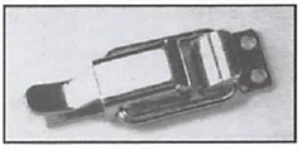

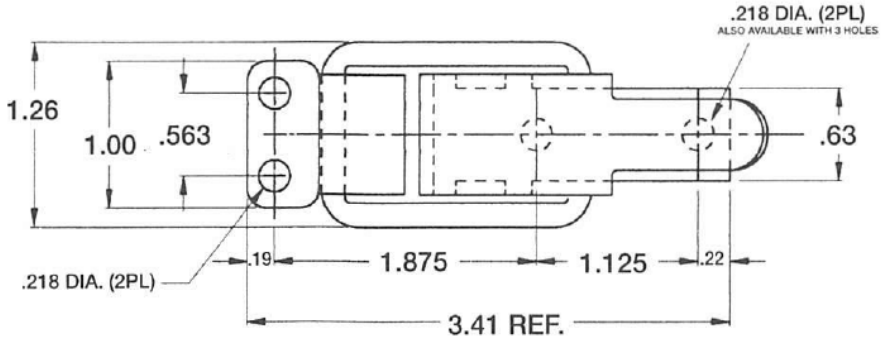

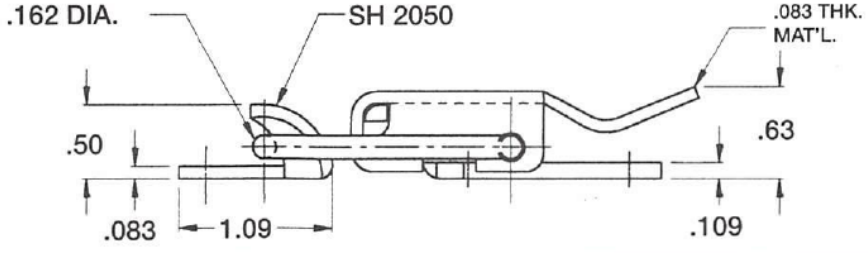

COMPRESSION SPRING PULL DOWN CATCHES

SERIES 2055

NOT AVAILABLE IN BRASS

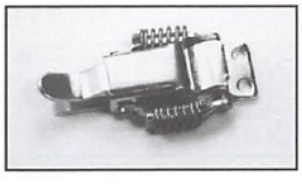

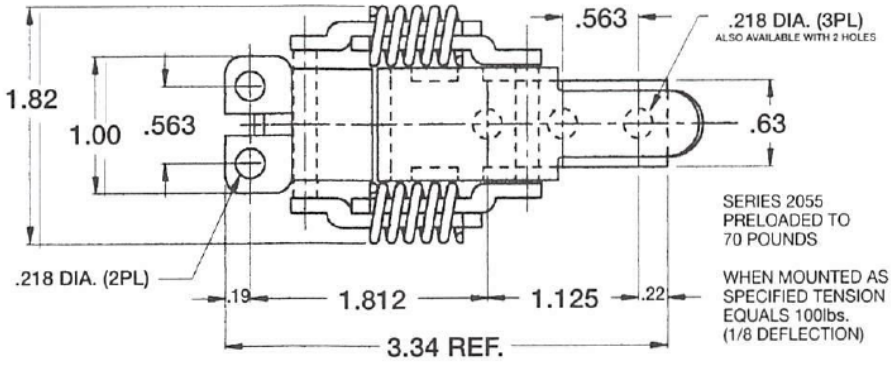

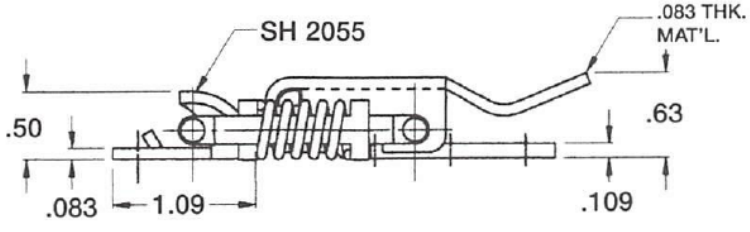

5 Pasco Hill Road • Cromwell, CT 06416-1093
Phone: 860-828-0847 • Call Toll Free: 800-243-6032 • Fax: 860-828-0381
Web Address: http://www.amatom.com • E-Mail: sales@amatom.com

AMATOM®

SERIES 2060 2070

FINISH

PL	PLAIN
ZN	ZINC
NI	NICKEL
BX	BLACK OXIDE
PS	PASSIVATE
LQ	LACQUERED

MATERIAL

CR	COLD ROLLED
SS	STAINLESS STEEL
BR	BRASS

MOUNTING OPTIONS

B	NO HOLES
H	HOLES

STANDARD HOLE SIZES
.218 DIA HOLE
XXX NO HOLE

SERIES 2060

ALSO AVAILABLE WITH COMPRESSION SPRINGS ORDER **2065**

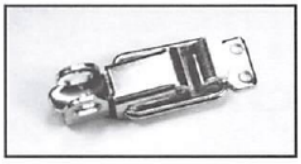

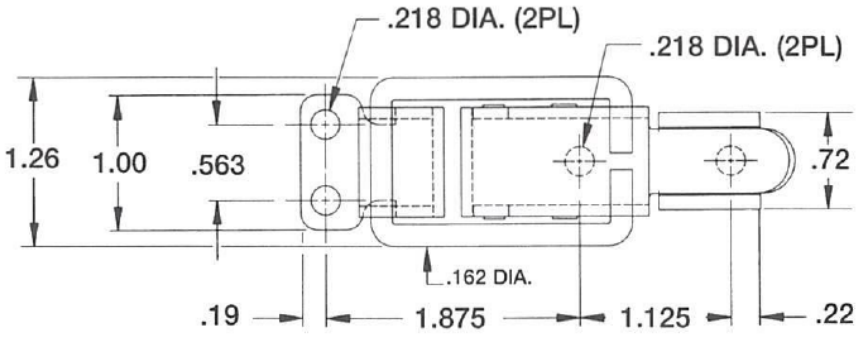

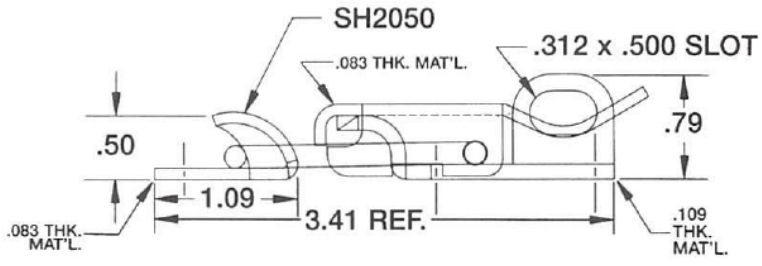

SERIES 2070

ALSO AVAILABLE WITH COMPRESSION SPRINGS ORDER **2075**

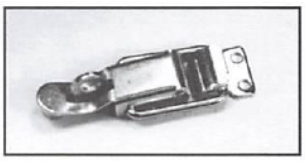

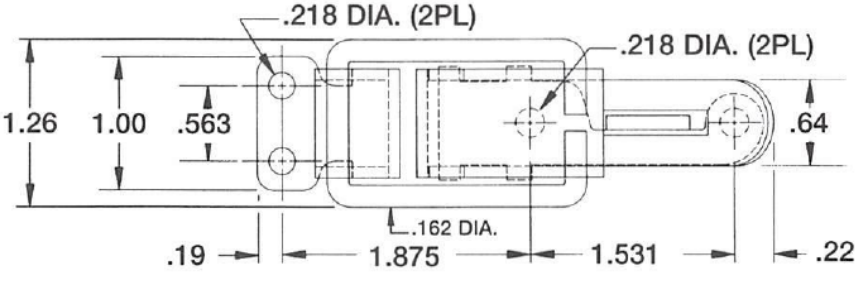

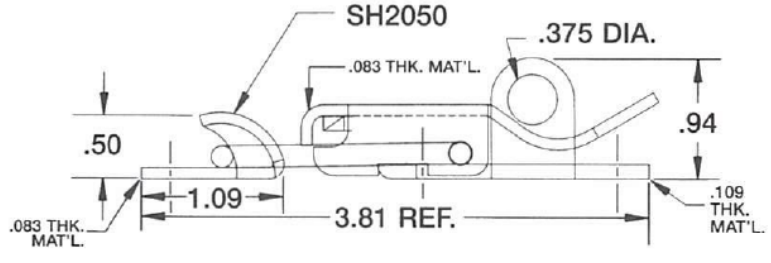

5 Pasco Hill Road • Cromwell, CT 06416-1093
Phone: 860-828-0847 • Call Toll Free: 800-243-6032 • Fax: 860-828-0381
Web Address: http://www.amatom.com • E-Mail: sales@amatom.com

SERIES 2080 2090

FINISH

PL	PLAIN
ZN	ZINC
NI	NICKEL
BX	BLACK OXIDE
PS	PASSIVATE
LQ	LACQUERED

MATERIAL

CR	COLD ROLLED
SS	STAINLESS STEEL
BR	BRASS

MOUNTING OPTIONS

B	NO HOLES
H	HOLES

STANDARD HOLE SIZES
.218 DIA HOLE
XXX NO HOLE

SERIES 2080

ALSO AVAILABLE WITH COMPRESSION SPRINGS ORDER **2085**

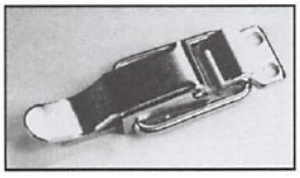

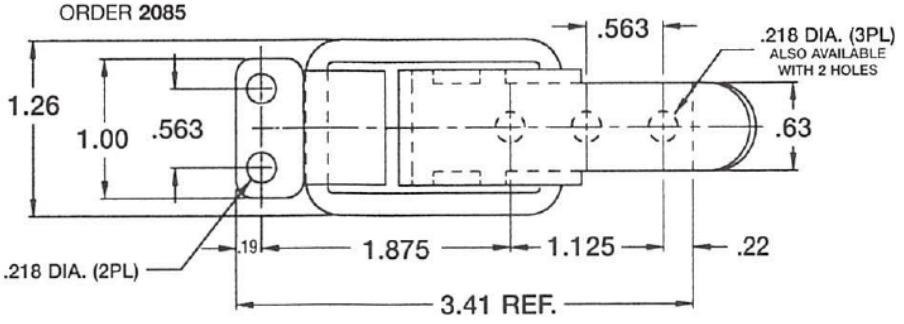

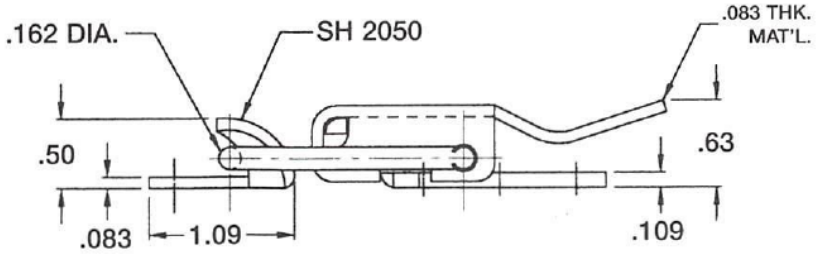

SERIES 2090

NOT AVAILABLE IN BRASS

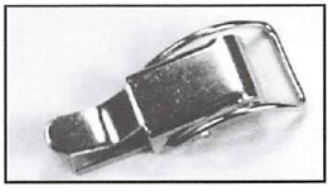

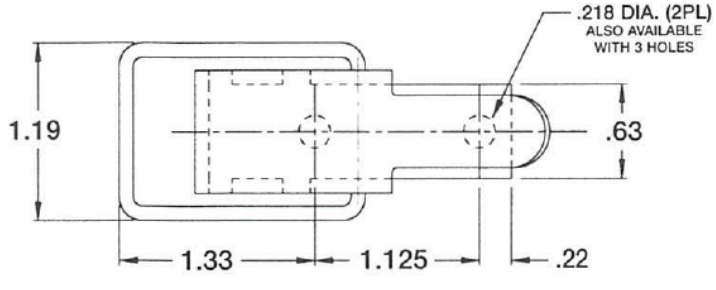

CAN BE USED WITH OPTIONAL 2050 STRIKE

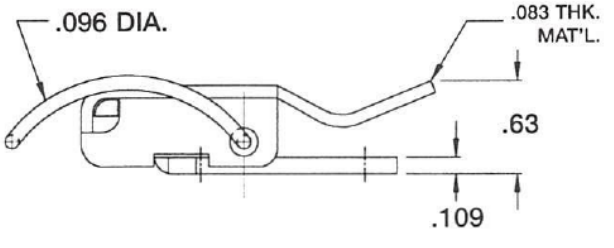

5 Pasco Hill Road • Cromwell, CT 06416-1093
Phone: 860-828-0847 • Call Toll Free: 800-243-6032 • Fax: 860-828-0381
Web Address: http://www.amatom.com • E-Mail: sales@amatom.com

AMATOM®

SERIES 2100 2200

FINISH

PL	PLAIN
ZN	ZINC
NI	NICKEL
BX	BLACK OXIDE
PS	PASSIVATE

MATERIAL

CR	COLD ROLLED
SS	STAINLESS STEEL

MOUNTING OPTIONS

B	NO HOLES
H	HOLES

SERIES 2100

STANDARD HOLE SIZES
.144 DIA HOLE
.166 DIA HOLE
XXX NO HOLE

SERIES 2200

STANDARD HOLE SIZES
.144 DIA HOLE
XXX NO HOLE

SERIES 2100

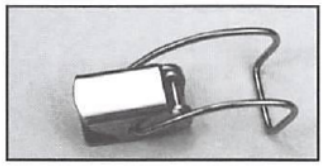

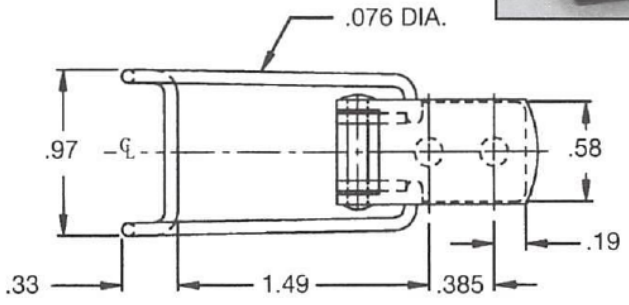

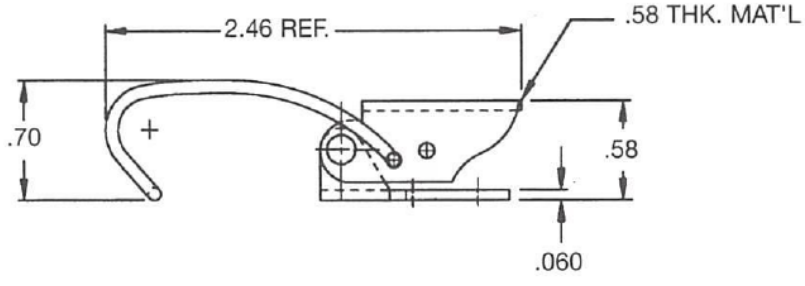

SERIES 2200

ADD QUANTITY OF HOLES REQUIRED IN BASE AT END OF P/N

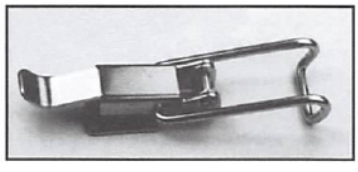

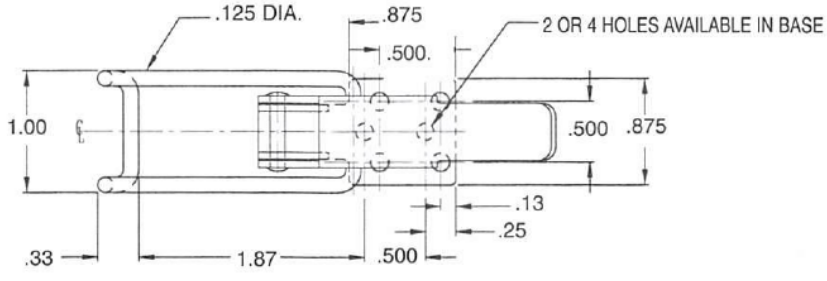

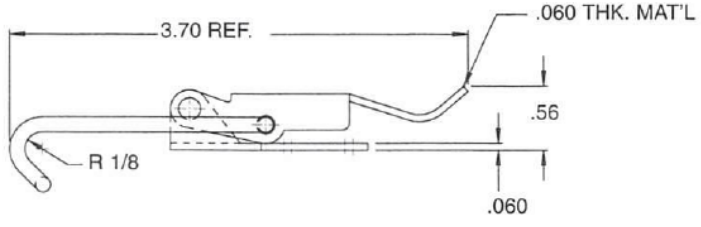

5 Pasco Hill Road • Cromwell, CT 06416-1093
Phone: 860-828-0847 • Call Toll Free: 800-243-6032 • Fax: 860-828-0381
Web Address: http://www.amatom.com • E-Mail: sales@amatom.com

AMATOM®

SERIES 2210 2215

FINISH

PL	PLAIN
ZN	ZINC
NI	NICKEL
BX	BLACK OXIDE
PS	PASSIVATE

MATERIAL

CR	COLD ROLLED
SS	STAINLESS STEEL

MOUNTING OPTIONS

B	NO HOLES
W	WELD PROJECTIONS

SERIES 2210

AVAILABLE WITH
OPTIONAL LOOP ORDER
2211 (.075 DIA. &.055" SHORTER)

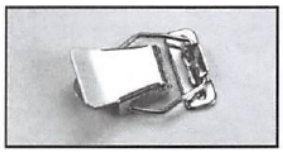

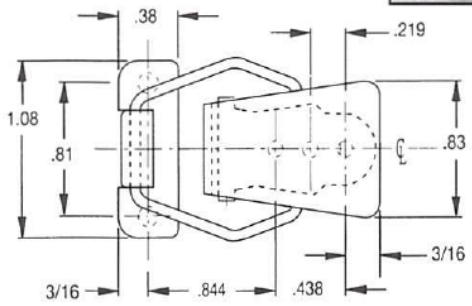

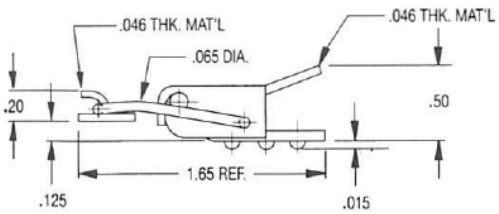

SERIES 2215

AVAILABLE WITH OPTIONAL
LOOPS ORDER
2216 (.060" LONGER)
2217 (.150" LONGER)
(NOT AVAILABLE IN SS)

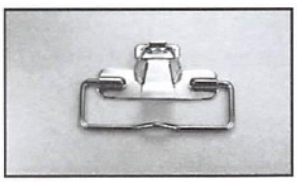

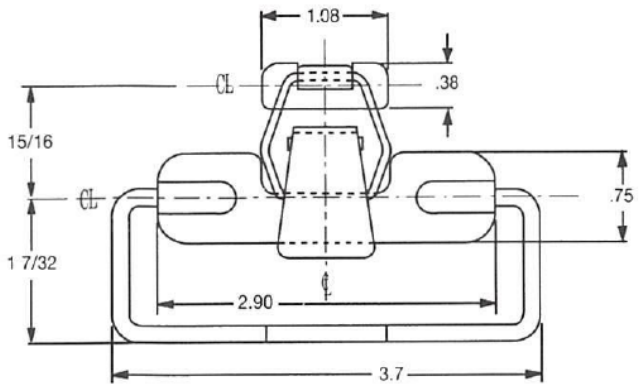

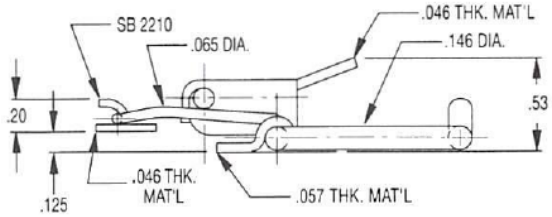

5 Pasco Hill Road • Cromwell, CT 06416-1093
Phone: 860-828-0847 • Call Toll Free: 800-243-6032 • Fax: 860-828-0381
Web Address: http://www.amatom.com • E-Mail: sales@amatom.com

AMATOM®

SERIES 2230 2240 2245

FINISH

PL	PLAIN
ZN	ZINC
NI	NICKEL
BX	BLACK OXIDE
PS	PASSIVATE
LQ	LACQUERED
CA	CLEAR ANODIZE

MATERIAL

CR	COLD ROLLED
SS	STAINLESS STEEL
BR	BRASS

MOUNTING OPTIONS

B	NO HOLES
H	HOLES

STANDARD HOLE SIZES
.130 DIA HOLE
.144 DIA HOLE
XXX NO HOLE

SERIES 2230

AVAILABLE ONLY WITH ALUMINUM BODY AND STAINLESS STEEL BAIL

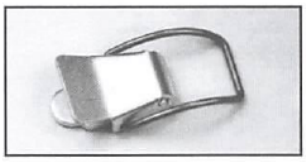

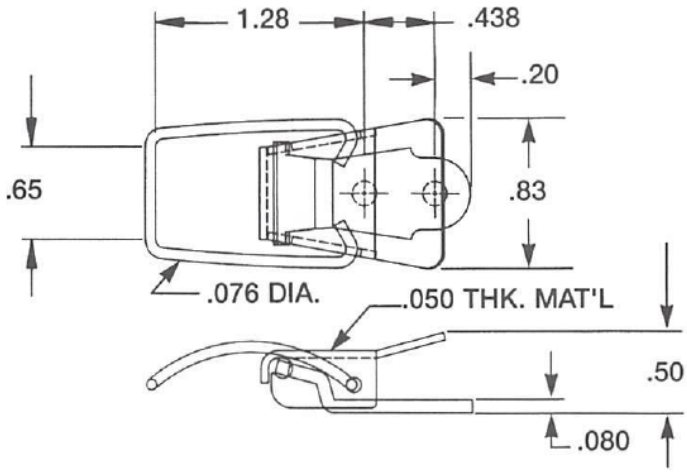

SERIES 2240 and 2245



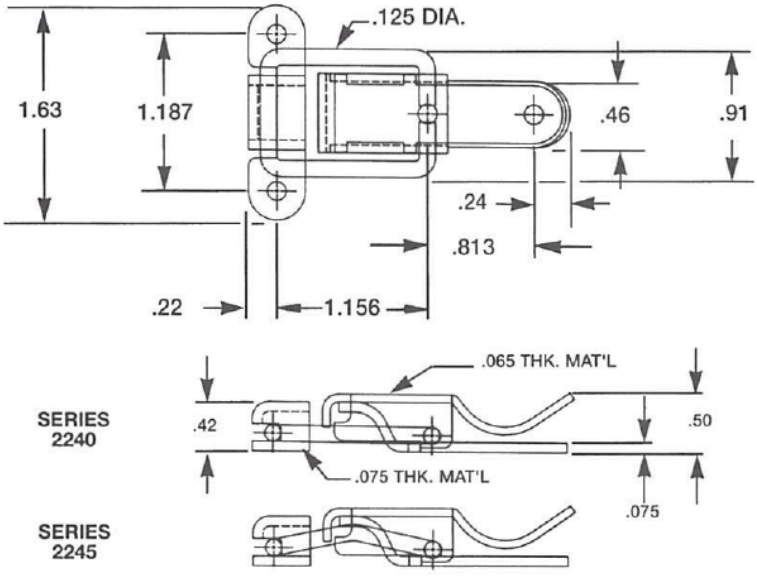

5 Pasco Hill Road • Cromwell, CT 06416-1093
Phone: 860-828-0847 • Call Toll Free: 800-243-6032 • Fax: 860-828-0381
Web Address: http://www.amatom.com • E-Mail: sales@amatom.com

AMATOM®

SERIES 2250 2270 2275

FINISH

PL	PLAIN
ZN	ZINC
NI	NICKEL
BX	BLACK OXIDE
PS	PASSIVATE
LQ	LACQUERED

MATERIAL

CR	COLD ROLLED
SS	STAINLESS STEEL
BR	BRASS

MOUNTING OPTIONS

B	NO HOLES
H	HOLES

STANDARD HOLE SIZES
.130 DIA HOLE
.144 DIA HOLE
XXX NO HOLE

SERIES 2250

(NOT AVAILABLE IN BRASS)
PRELOADED TO 30 LBS.
WHEN MOUNTED AS SPECIFIED
TENSION EQUALS 50 LBS. (1/8" DEFLECTION)

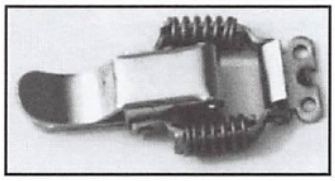

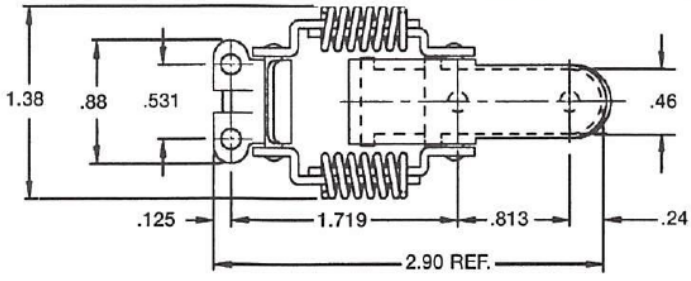

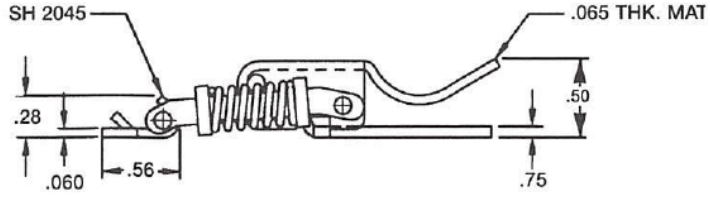

LIGHT & MEDIUM DUTY PULL DOWN CATCHES

SERIES 2270 and 2275

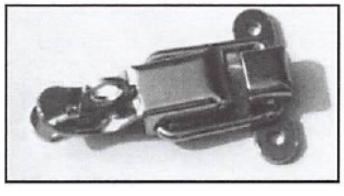

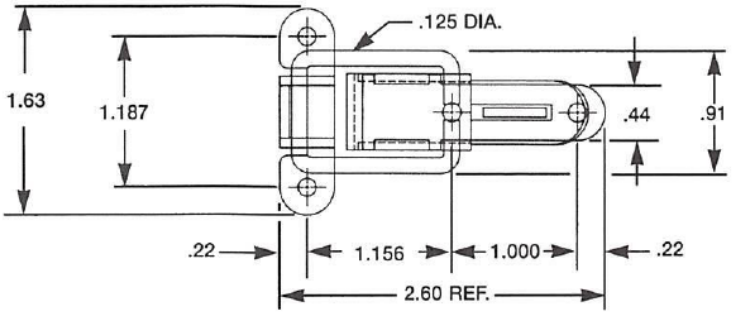

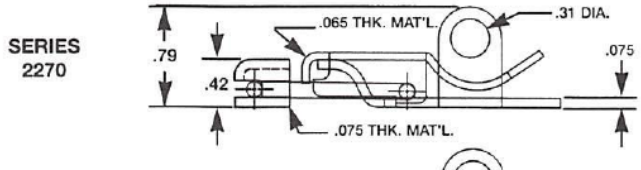

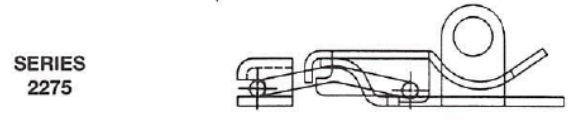

5 Pasco Hill Road • Cromwell, CT 06416-1093
Phone: 860-828-0847 • Call Toll Free: 800-243-6032 • Fax: 860-828-0381
Web Address: http://www.amatom.com • E-Mail: sales@amatom.com

AMATOM®

SERIES 2273 2280

FINISH

PL	PLAIN
ZN	ZINC
NI	NICKEL
BX	BLACK OXIDE
PS	PASSIVATE

MATERIAL

CR	COLD ROLLED
SS	STAINLESS STEEL

MOUNTING OPTIONS

B	NO HOLES
H	HOLES

STANDARD HOLE SIZES
.130 DIA HOLE
.144 DIA HOLE
XXX NO HOLE

SERIES 2273

AVAILABLE WITH OPTIONAL LOOPS

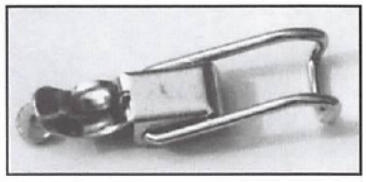

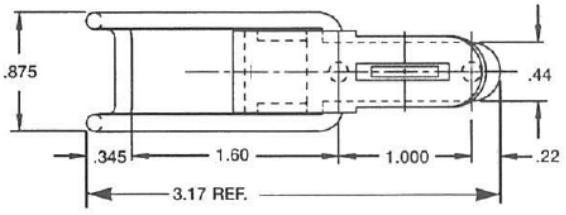

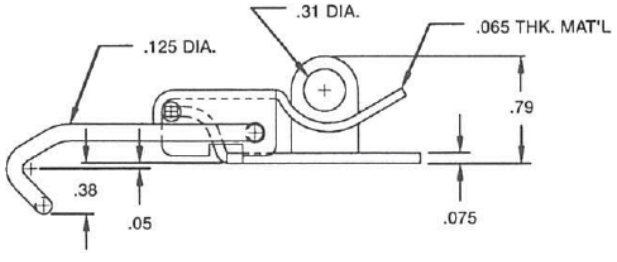

COMPRESSION SPRING PULL DOWN CATCHES

SERIES 2280

PRELOADED TO 30 LBS. WHEN MOUNTED AS SPECIFIED TENSION EQUALS 50 LBS. (1/8" DEFLECTION)

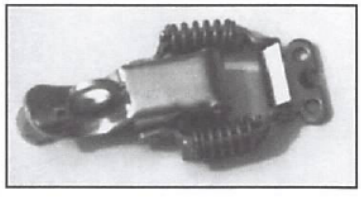

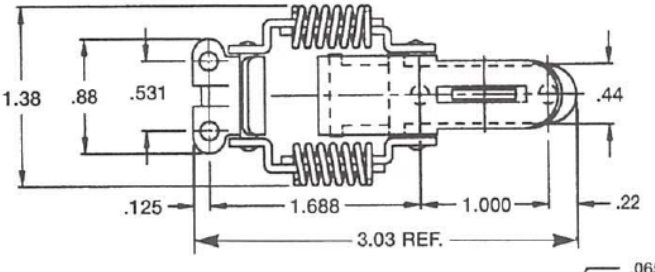

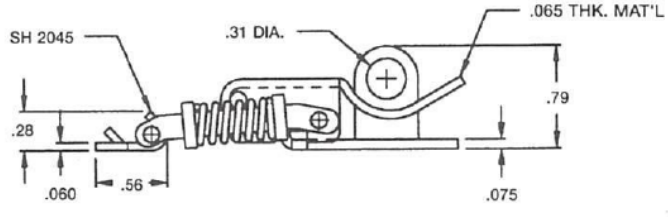

5 Pasco Hill Road • Cromwell, CT 06416-1093
Phone: 860-828-0847 • Call Toll Free: 800-243-6032 • Fax: 860-828-0381
Web Address: http://www.amatom.com • E-Mail: sales@amatom.com

SERIES 3000 3400

FINISH

PL	PLAIN
ZN	ZINC
NI	NICKEL
BX	BLACK OXIDE
PS	PASSIVATE
LQ	LACQUERED
OD	OLIVE DRAB
YC	YELLOW CHROMATE

MATERIAL

CR	COLD ROLLED
SS	STAINLESS STEEL

MOUNTING OPTIONS

B	NO HOLES
H	HOLES

SERIES 3000
STANDARD HOLE SIZES
.130 DIA HOLE
.144 DIA HOLE
XXX NO HOLE

DIMENSION A	LBS.
1.812	30
1.875	50
1.937	70

SERIES 3400
STANDARD HOLE SIZES
.130 DIA HOLE
CSK #2 COUNTER SINK
XXX NO HOLE

SERIES 3000

AVAILABLE WITH LARGER OPTIONAL STRIKE
ORDER SH 3501

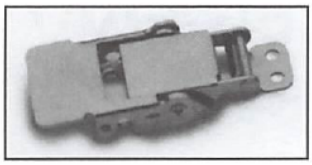

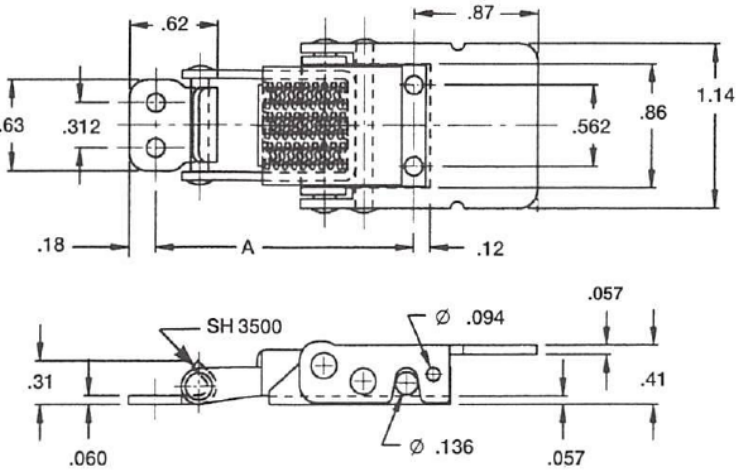

SERIES 3400

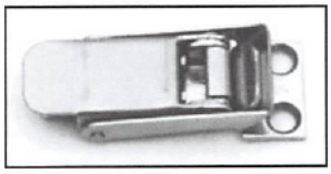

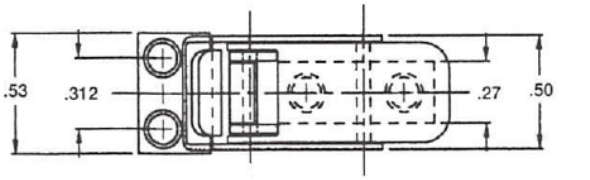

SERIES 3400

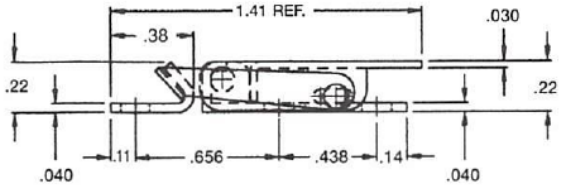

SERIES 3410

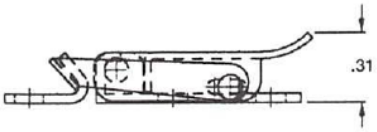

SERIES 3420

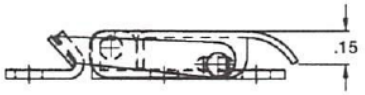

5 Pasco Hill Road • Cromwell, CT 06416-1093
Phone: 860-828-0847 • Call Toll Free: 800-243-6032 • Fax: 860-828-0381
Web Address: http://www.amatom.com • E-Mail: sales@amatom.com

AMATOM®

SERIES 3500

SERIES 3500

ALSO AVAILABLE WITH
LIGHTER TENSION SPRINGS
ORDER 3501, 3511 & 3521
LARGER OPTIONAL STRIKE
AVAILABLE **SH 3501**

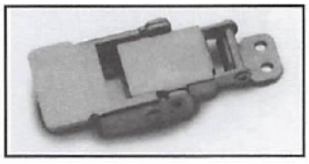

FINISH

PL	PLAIN
ZN	ZINC
NI	NICKEL
BX	BLACK OXIDE
PS	PASSIVATE
LQ	LACQUERED
OD	OLIVE DRAB
YC	YELLOW CHROMATE

MATERIAL

CR	COLD ROLLED
SS	STAINLESS STEEL

MOUNTING OPTIONS

B	NO HOLES
H	HOLES

STANDARD HOLE SIZES
.130 DIA HOLE
.144 DIA HOLE
XXX NO HOLE

DIMENSION A	LBS.
1.812	30
1.875	50
1.937	70

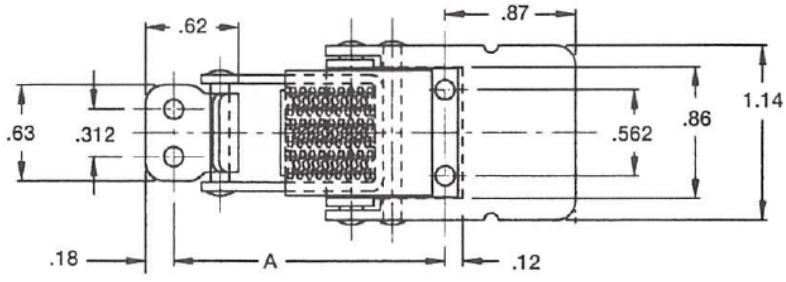

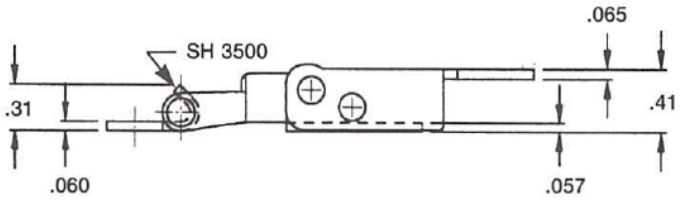

SERIES 3510

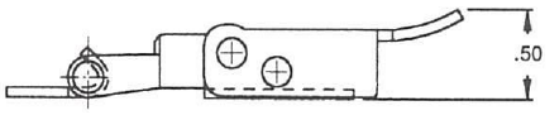

SERIES 3520

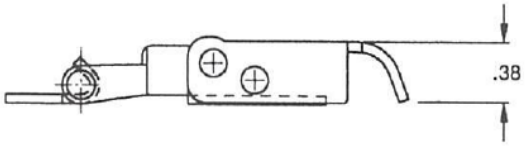

5 Pasco Hill Road • Cromwell, CT 06416-1093
Phone: 860-828-0847 • Call Toll Free: 800-243-6032 • Fax: 860-828-0381
Web Address: http://www.amatom.com • E-Mail: sales@amatom.com

AMATOM®

SERIES 3530 3540

SERIES 3530

AVAILABLE WITH LARGER OPTIONAL STRIKE ORDER **SH 3501**

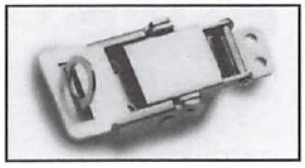

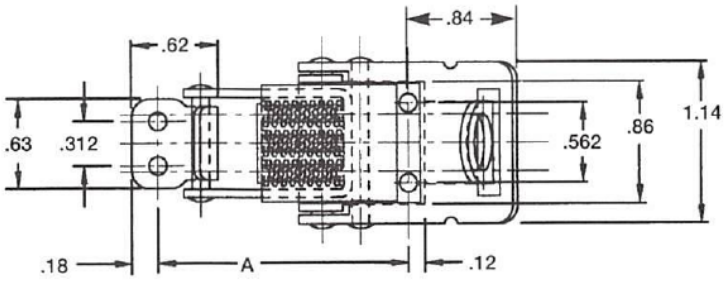

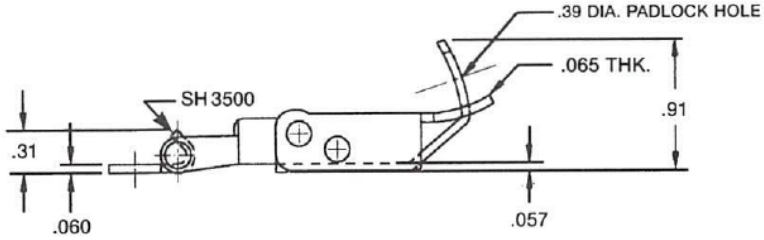

FINISH

PL	PLAIN
ZN	ZINC
NI	NICKEL
BX	BLACK OXIDE
PS	PASSIVATE
LQ	LACQUERED
OD	OLIVE DRAB
YC	YELLOW CHROMATE

MATERIAL

CR	COLD ROLLED
SS	STAINLESS STEEL

MOUNTING OPTIONS

B	NO HOLES
H	HOLES

STANDARD HOLE SIZES
.130 DIA HOLE
.144 DIA HOLE
XXX NO HOLE

DIMENSION A	LBS.
1.812	30
1.875	50
1.937	70

SERIES 3540

WITH SECURITY LOCK FEATURE AVAILABLE WITH LARGER OPTIONAL STRIKE ORDER **SH 3501**

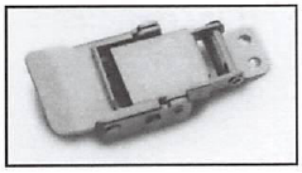

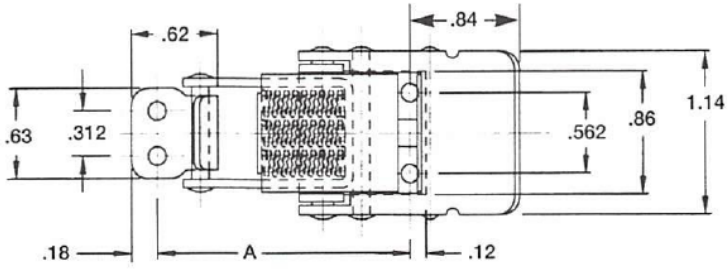

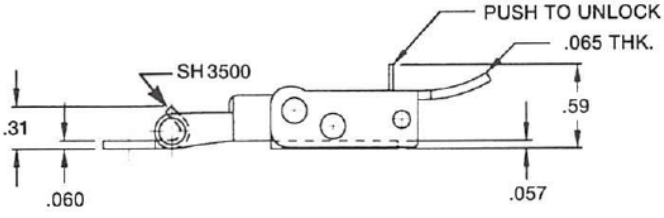

5 Pasco Hill Road • Cromwell, CT 06416-1093
Phone: 860-828-0847 • Call Toll Free: 800-243-6032 • Fax: 860-828-0381
Web Address: http://www.amatom.com • E-Mail: sales@amatom.com

AMATOM®

SERIES 3600 3700

SERIES 3600

ALSO AVAILABLE AS:
UP-TURN LEVER **3610**
DOWN-TURN LEVER **3620**
PADLOCK HOLE **3630**
LOCKING LEVER **3640**
(SEE SERIES 3500)

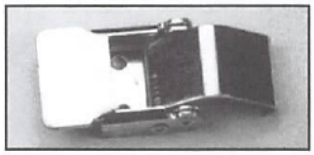

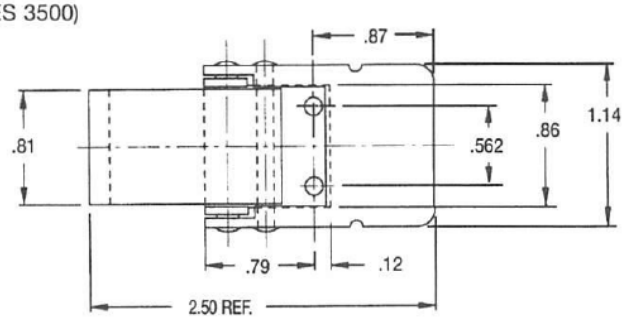

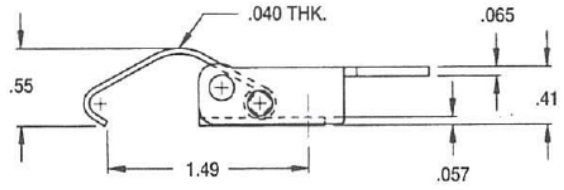

FINISH

PL	PLAIN
ZN	ZINC
NI	NICKEL
BX	BLACK OXIDE
PS	PASSIVATE
LQ	LACQUERED
OD	OLIVE DRAB
YC	YELLOW CHROMATE

MATERIAL

CR	COLD ROLLED
SS	STAINLESS STEEL

MOUNTING OPTIONS

B	NO HOLES
H	HOLES

SERIES 3600

STANDARD HOLE SIZES
.130 DIA HOLE
.144 DIA HOLE
XXX NO HOLE

SERIES 3700

STANDARD HOLE SIZES
.135 DIA HOLE
XXX NO HOLE

SERIES 3700

AVAILABLE IN 316
STAINLESS STEEL

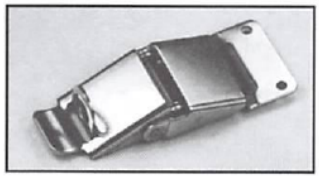

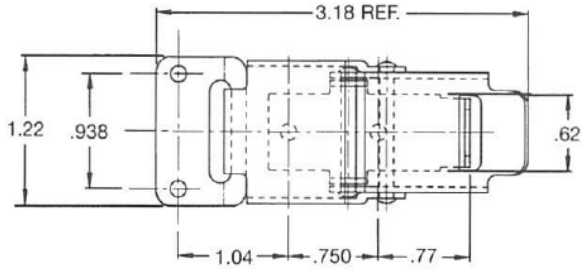

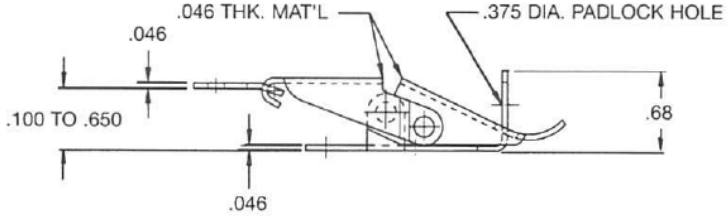

5 Pasco Hill Road • Cromwell, CT 06416-1093
Phone: 860-828-0847 • Call Toll Free: 800-243-6032 • Fax: 860-828-0381
Web Address: http://www.amatom.com • E-Mail: sales@amatom.com

SERIES 4000 4010

SERIES 4000

AVAILABLE WITH OPTIONAL
6.00" RADIUS BASE
ORDER 4020

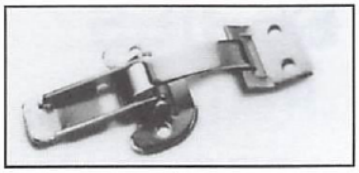

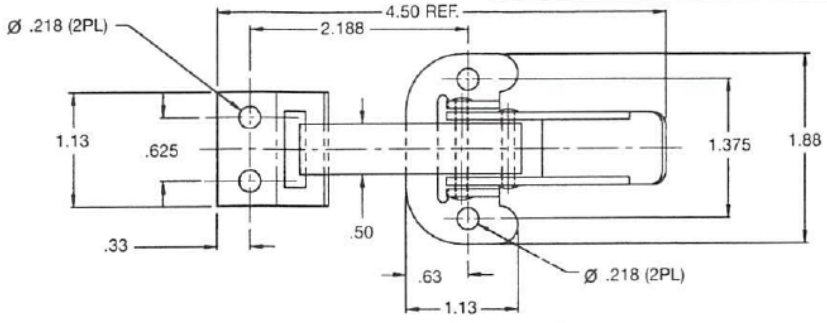

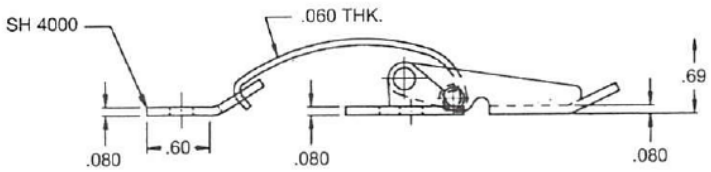

SERIES 4010

AVAILABLE WITH OPTION,
6.00" RADIUS BASE
ORDER 4030

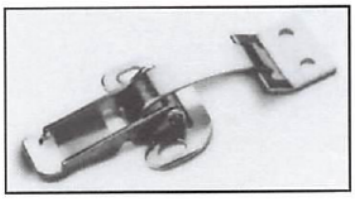

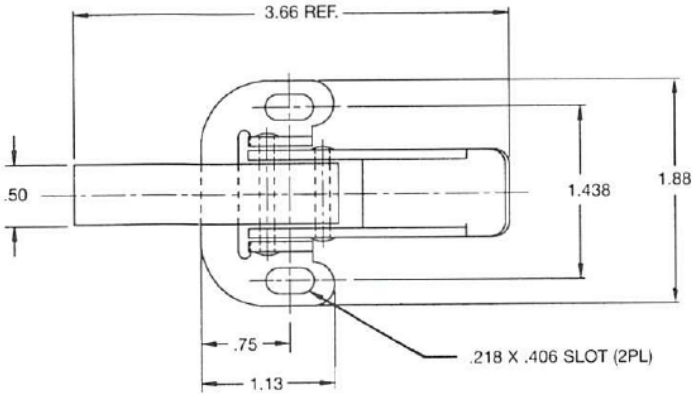

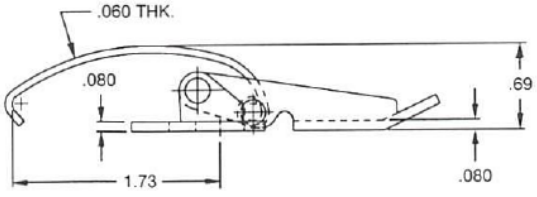

FINISH

PL	PLAIN
ZN	ZINC
NI	NICKEL
BX	BLACK OXIDE
PS	PASSIVATE
LQ	LACQUERED

MATERIAL

CR	COLD ROLLED
SS	STAINLESS STEEL

MOUNTING OPTIONS

B	NO HOLES
H	HOLES

SERIES 4000

STANDARD HOLE SIZES
.218 DIA HOLE
XXX NO HOLE

NOTE:
ADD (1) TO SERIES NUMBER FOR HOOK WITH VINYL TIP. (REF. 4000 WOULD BE 4001)

5 Pasco Hill Road • Cromwell, CT 06416-1093
Phone: 860-828-0847 • Call Toll Free: 800-243-6032 • Fax: 860-828-0381
Web Address: http://www.amatom.com • E-Mail: sales@amatom.com

AMATOM®

SERIES 4040 4050

FINISH

PL	PLAIN
ZN	ZINC
NI	NICKEL
BX	BLACK OXIDE
PS	PASSIVATE
LQ	LACQUERED

MATERIAL

CR	COLD ROLLED
SS	STAINLESS STEEL

MOUNTING OPTIONS

B	NO HOLES
H	HOLES

STANDARD HOLE SIZES
.218 DIA HOLE
XXX NO HOLE

NOTE:
ADD (1) TO SERIES NUMBER FOR HOOK WITH VINYL TIP. (REF. 4040 WOULD BE 4041)

SERIES 4040

NARROW BASE

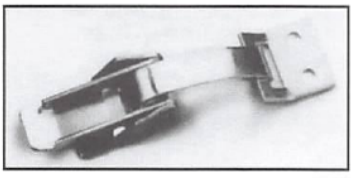

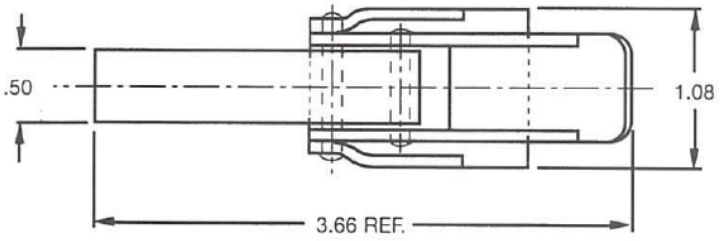

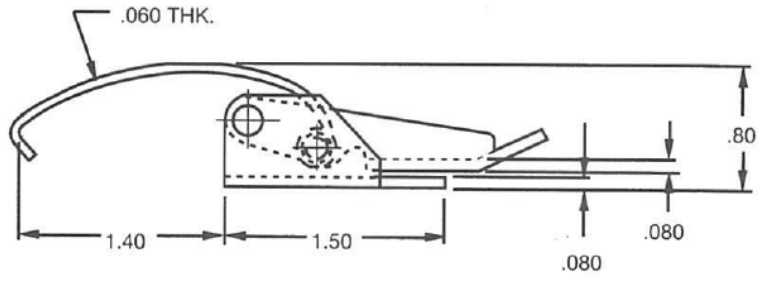

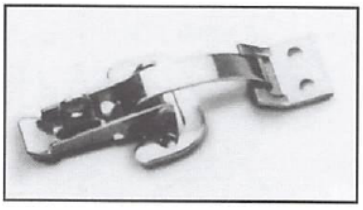

SERIES 4050

PADLOCK EYE BASE
CONSISTS OF
CH 4050 CATCH
BH 4050 BASE
MUST BE ORDERED SEPARATELY

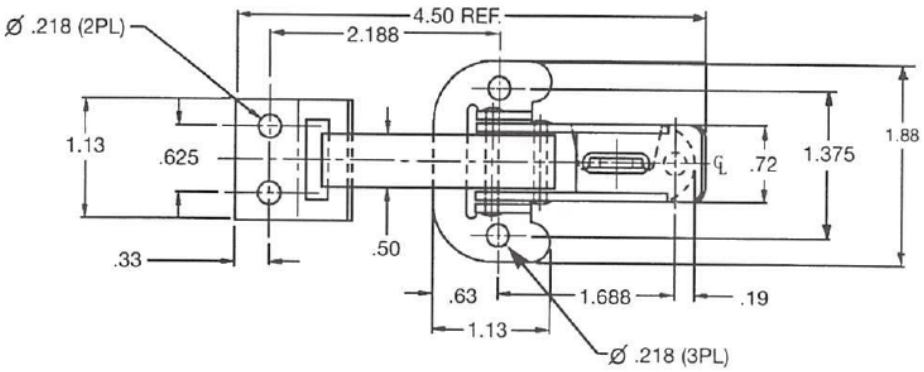

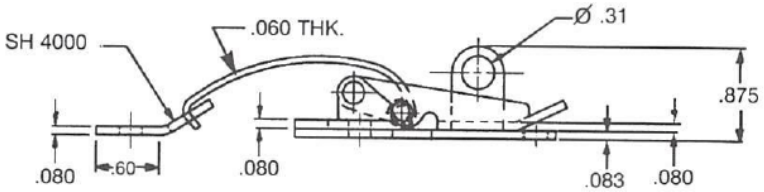

5 Pasco Hill Road • Cromwell, CT 06416-1093
Phone: 860-828-0847 • Call Toll Free: 800-243-6032 • Fax: 860-828-0381
Web Address: http://www.amatom.com • E-Mail: sales@amatom.com

SERIES 4100 4150

SERIES 4100

AVAILABLE WITH OPTIONAL BASE ORDER
4110 STANDARD BASE - SLOTTED
4120 RADIUS BASE - HOLES
4130 RADIUS BASE - SLOTTED
4140 NARROW BASE
(SEE SERIES 4000)

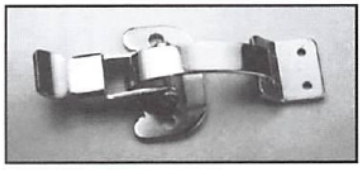

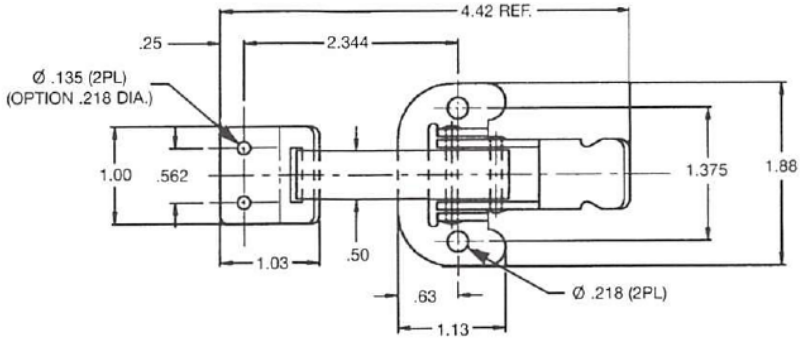

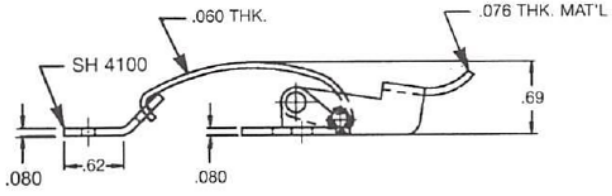

SERIES 4150

LARGER HOOK
AVAILABLE WITH OPTIONAL BASE ORDER
4160 STANDARD BASE - SLOTTED
4170 RADIUS BASE - HOLES
4180 RADIUS BASE - SLOTTED
4190 NARROW BASE
(SEE SERIES 4000)

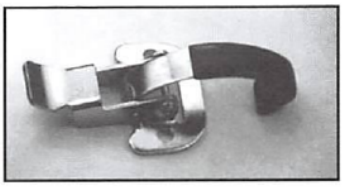

PHOTO SHOWN WITH VINYL TIP **SERIES 4151**

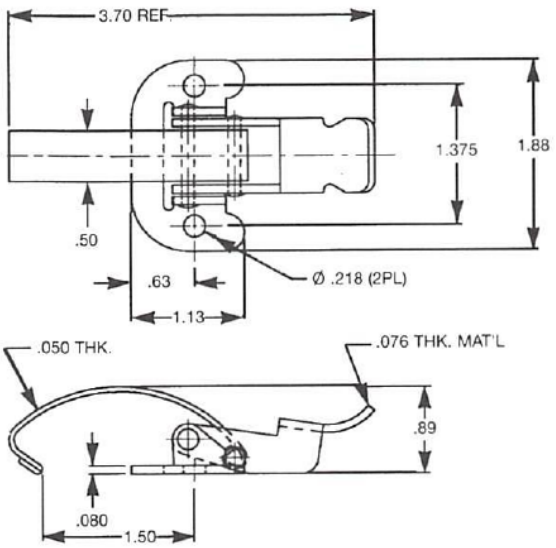

FINISH

PL	PLAIN
ZN	ZINC
NI	NICKEL
BX	BLACK OXIDE
PS	PASSIVATE
LQ	LACQUERED

MATERIAL

CR	COLD ROLLED
SS	STAINLESS STEEL

MOUNTING OPTIONS

B	NO HOLES
H	HOLES

STANDARD HOLE SIZES
.218 DIA HOLE
XXX NO HOLE

NOTE:
ADD (1) TO SERIES NUMBER FOR HOOK WITH VINYL TIP.
(REF. 4100 WOULD BE 4101)

5 Pasco Hill Road • Cromwell, CT 06416-1093
Phone: 860-828-0847 • Call Toll Free: 800-243-6032 • Fax: 860-828-0381
Web Address: http://www.amatom.com • E-Mail: sales@amatom.com

AMATOM®

HEAVY DUTY HANDLE
PART NUMBER ORDERING SYSTEM

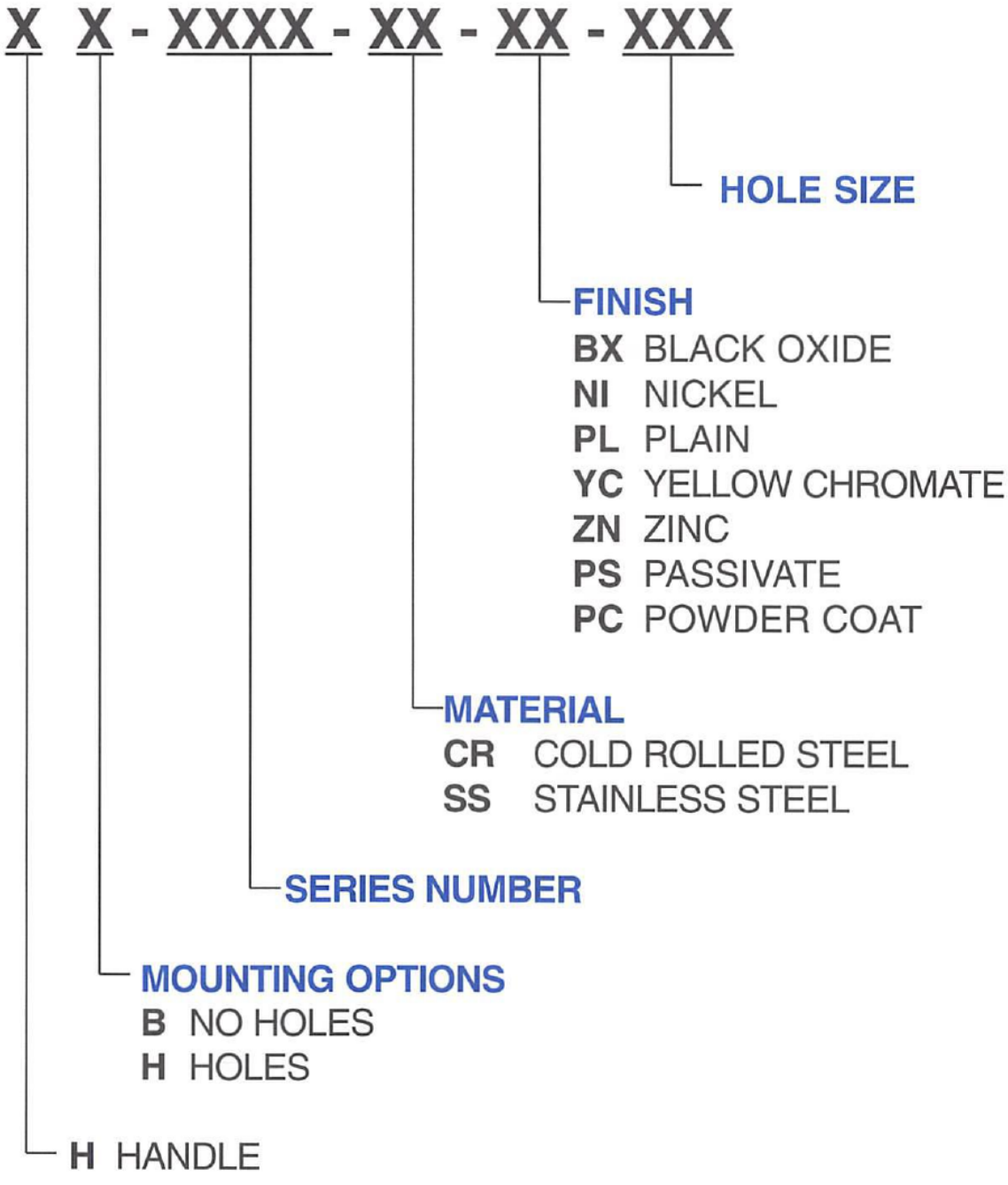

5 Pasco Hill Road • Cromwell, CT 06416-1093
Phone: 860-828-0847 • Call Toll Free: 800-243-6032 • Fax: 860-828-0381
Web Address: http://www.amatom.com • E-Mail: sales@amatom.com

AMATOM®

SERIES 7000 LIFTING GRIP HEAVY DUTY HANDLES

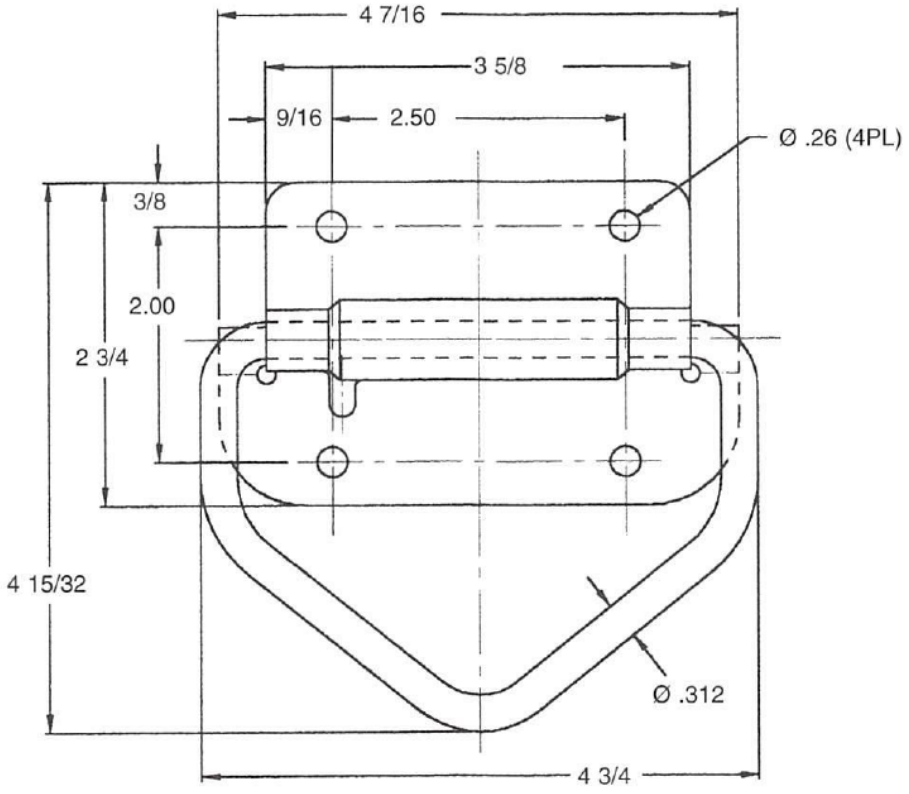

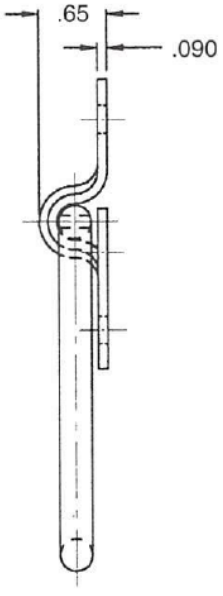

TOLERANCES:	
FRACTIONS:	+/- .031
DECIMALS:	.XX +/- .015
	.XXX +/- .005
ANGLES:	+/-3 DEG.

5 Pasco Hill Road • Cromwell, CT 06416-1093
Phone: 860-828-0847 • Call Toll Free: 800-243-6032 • Fax: 860-828-0381
Web Address: http://www.amatom.com • E-Mail: sales@amatom.com

SERIES 8000 STRAIGHT & OFFSET HEAVY DUTY HANDLES

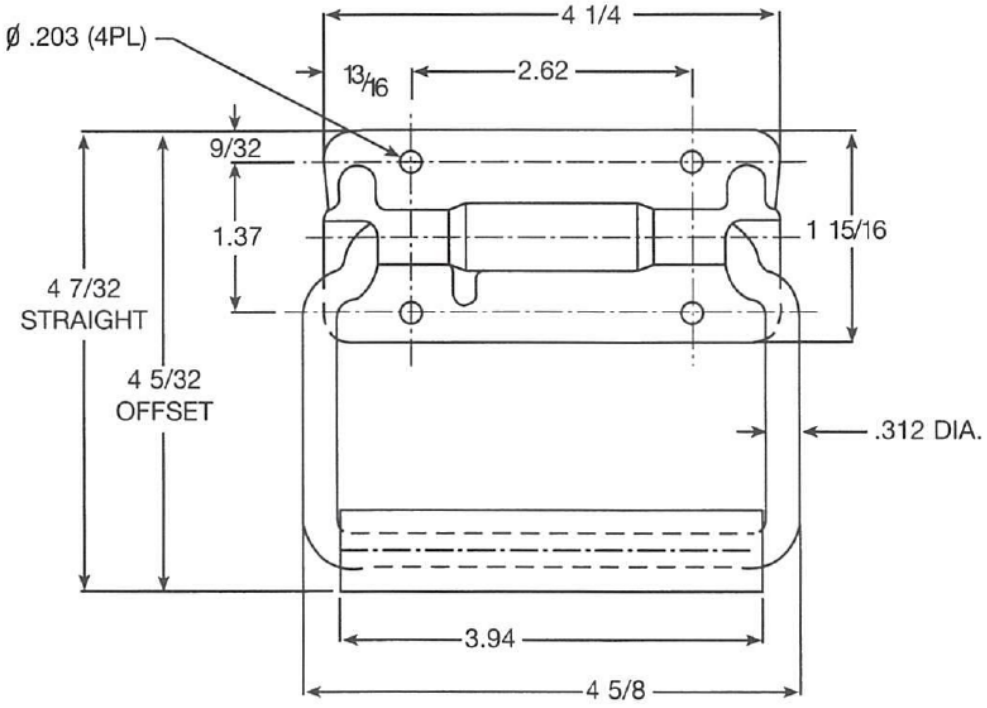

SERIES 8000
STRAIGHT

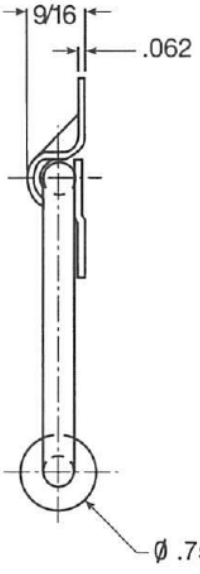

SERIES 8010
OFFSET

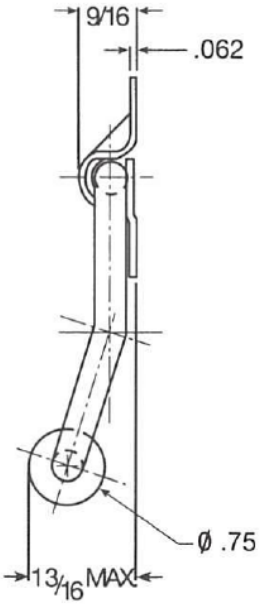

TOLERANCES:	
FRACTIONS:	+/- .031
DECIMALS:	.XX +/- .015
	.XXX +/- .005
ANGLES:	+/- 3 DEG.

5 Pasco Hill Road • Cromwell, CT 06416-1093
Phone: 860-828-0847 • Call Toll Free: 800-243-6032 • Fax: 860-828-0381
Web Address: http://www.amatom.com • E-Mail: sales@amatom.com

AMATOM®

SERIES 9000 HEAVY DUTY HANDLES

(90 DEG. STOP & SPRING RETURN)

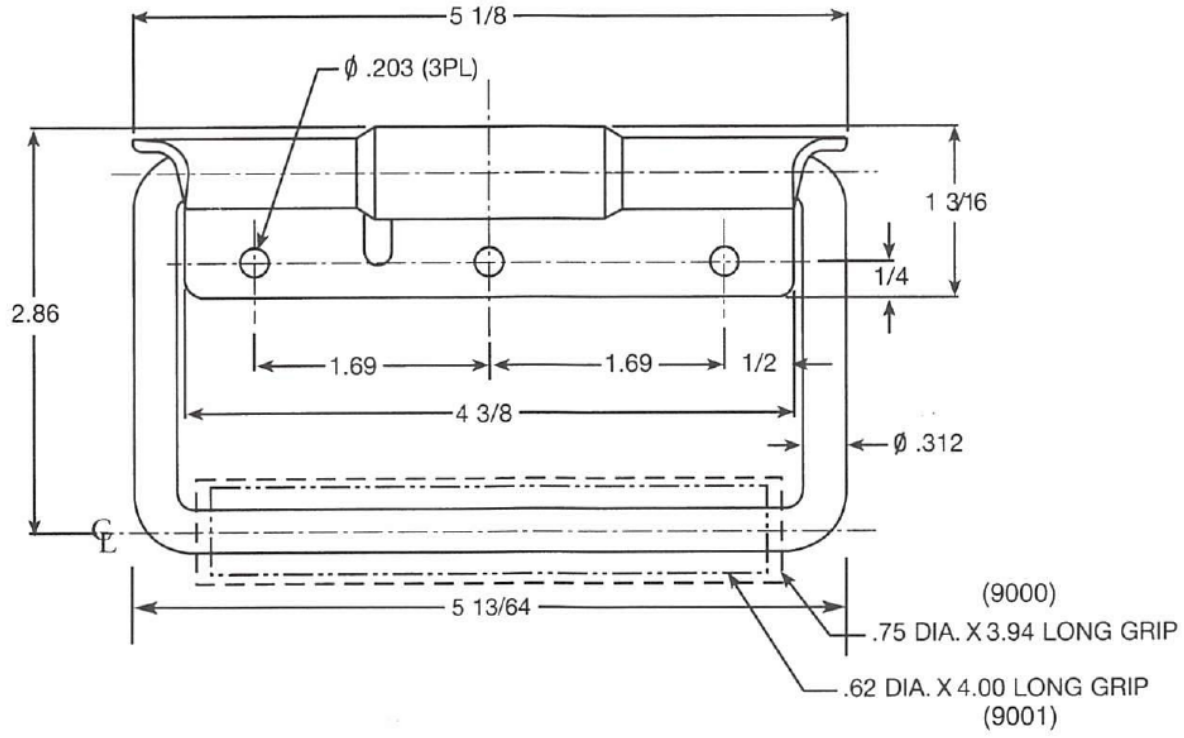

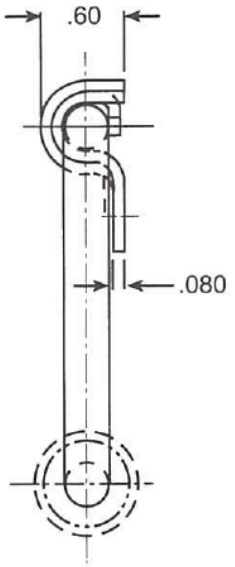

TOLERANCES:	
FRACTIONS:	+/- .031
DECIMALS:	.XX +/- .015
	.XXX +/- .005
ANGLES:	+/- 3 DEG.

5 Pasco Hill Road • Cromwell, CT 06416-1093
Phone: 860-828-0847 • Call Toll Free: 800-243-6032 • Fax: 860-828-0381
Web Address: http://www.amatom.com • E-Mail: sales@amatom.com

AMATOM®



CROSS REFERENCE CHARTS

ELECTRONIC HARDWARE
REFERENCE MANUAL

Call Toll Free
From anywhere in the USA Call Cromwell, CT **1-800-243-6032**

AMATOM ELECTRONIC HARDWARE
5 Pasco Hill Road
Cromwell, CT 06416-1093
860-828-0847
Fax: 860-828-0381
E-Mail: sales@amatom.com
Web Address: http://www.amatom.com

CROSS REFERENCE CHARTS

AMATOM®

AMATOM / NAS Cross Reference

NAS 1829 MALE/FEMALE STANDOFFS

NAS Part Number Structure

N A S 1 8 2 9 **C** **3 C 0 3**

C — Material & Finish Code; **3 C 0 3** — Part Size/Thread

N A S 1 8 2 9 **A** **3 B 0 4**

A — Material & Finish Code; **3 B 0 4** — Part Size/Thread

Amatom Part Number Structure

9723 - **SS** - **0440** - **7**

9723 — Base No.; **SS** — Material Code; **0440** — Thread Size (male & female same); **7** — Finish Code

9724 - **A** - **0440** - **0256** - **1B**

9724 — Base No.; **A** — Material Code; **0440** — Male Thread; **0256** — Female Thread; **1B** — Finish Code

Thread Size 0256	Thread Size Male Female M 0440 F 0256	Thread Size 0440	Amatom Base Number
3A03	3B03	3C03	**9723**
3A04	3B04	3C04	**9724**
3A05	3B05	3C05	**9725**
3A06	3B06	3C06	**9726**
3A07	3B07	3C07	**9727**
3A08	3B08	3C08	**9728**
3A09	3B09	3C09	**9729**
3A10	3B10	3C10	**9730**
3A11	3B11	3C11	**9731**
3A12	3B12	3C12	**9732**
3A13	3B13	3C13	**9733**
3A14	3B14	3C14	**9734**
3A15	3B15	3C15	**9735**
3A16	3B16	3C16	**9736**

Examples
NAS1829C3B14 = 9734-SS-0440-0256-7
NAS1829BT3C10 = 9730-B-0440-14

NAS Material & Finish Codes	Description	AMATOM Codes	
		Material	Finish
A	Aluminum, Anodic Coated	A	1B
AC	Aluminum, Gold Irridite	A	17
B	Brass, Cadmium-Plate	B	999
BT	Brass, Tin Plate	B	14
C	Stainless Steel, Passivated	SS	7
H	Nylon, no finish	N	00

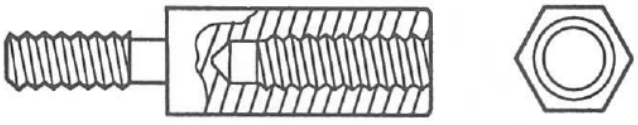

Thread Size 0440	Thread Size Male Female M 0632 F 0440	Thread size 0632	Thread Size Male Female M0832 F0632	Thread Size 0832	AMATOM Base Number
4C04	4D04	4E04	4F04	4G04	**9737**
4C05	4D05	4E05	4F05	4G05	**9737-20**
4C06	4D06	4E06	4F06	4G06	**9738**
4C07	4D07	4E07	4F07	4G07	**9737-28**
4C08	4D08	4E08	4F08	4G08	**9739**
4C09	4D09	4E09	4F09	4G09	**9739-36**
4C10	4D10	4E10	4F10	4G10	**9740**
4C11	4D11	4E11	4F11	4G11	**9740-44**
4C12	4D12	4E12	4F12	4G12	**9741**
4C13	4D13	4E13	4F13	4G13	**9741-52**
4C14	4D14	4E14	4F14	4G14	**9742**
4C15	4D15	4E15	4F15	4G15	**9742-60**
4C16	4D16	4E16	4F16	4G16	**9743**
4C17	4D17	4E17	4F17	4G17	**9743-4**
4C18	4D18	4E18	4F18	4G18	**9744**
4C19	4D19	4E19	4F19	4G19	**9744-12**
4C20	4D20	4E20	4F20	4G20	**9745**
4C21	4D21	4E21	4F21	4G21	**9745-20**
4C22	4D22	4E22	4F22	4G22	**9746**
4C23	4D23	4E23	4F23	4G23	**9746-28**
4C24	4D24	4E24	4F24	4G24	**9747**
4C25	4D25	4E25	4F25	4G25	**9747-36**
4C26	4D26	4E26	4F26	4G26	**9748**
4C28	4D28	4E28	4F28	4G28	**9749**
4C30	4D30	4E30	4F30	4G30	**9750**
4C32	4D32	4E32	4F32	4G32	**9751**
				4G36	**9751-16**
				4G40	**9751-32**
				4G44	**9751-48**
				4G48	**9751-64**

Examples: NAS1829AC4F14 = 9724-A-0832-0632-17
NAS1829H4D07 = 9738-28-N-0632-0440-0

Thread Size 0632	Thread Size Male Female M 0832 F 0632	Thread size 0832	Thread Size Male Female M1032 F0832	Thread Size 1032	AMATOM Base Number
6E06	6F06	6G06	6H06	6J06	**9753**
6E07	6F07	6G07	6H07	6J07	**9753-28**
6E08	6F08	6G08	6H08	6J08	**9754**
6E09	6F09	6G09	6H09	6J09	**9754-36**
6E10	6F10	6G10	6H10	6J10	**9755**
6E11	6F11	6G11	6H11	6J11	**9755-44**
6E12	6F12	6G12	6H12	6J12	**9756**
6E13	6F13	6G13	6H13	6J13	**9756-52**
6E14	6F14	6G14	6H14	6J14	**9757**
6E15	6F15	6G15	6H15	6J15	**9757-60**
6E16	6F16	6G16	6H16	6J16	**9758**
6E17	6F17	6G17	6H17	6J17	**9758-4**
6E18	6F18	6G18	6H18	6J18	**9759**
6E19	6F19	6G19	6H19	6J19	**9759-12**
6E20	6F20	6G20	6H20	6J20	**9760**
6E21	6F21	6G21	6H21	6J21	**9760-20**
6E22	6F22	6G22	6H22	6J22	**9761**
6E23	6F23	6G23	6H23	6J23	**9761-28**
6E24	6F24	6G24	6H24	6J24	**9762**
6E25	6F25	6G25	6H25	6J25	**9762-36**
6E26	6F26	6G26	6H26	6J26	**9763**
6E28	6F28	6G28	6H28	6J28	**9764**
6E30	6F30	6G30	6H30	6J30	**9765**
6E32	6F32	6G32	6H32	6J32	**9766**
6E36	6F36	6G36	6H36	6J36	**9767-16**
6E40	6F40	6G40	6H40	6J40	**9768**
6E44	6F44	6G44	6H44	6J44	**9769**
6E48	6F48	6G48	6H48	6J48	**9770**

Examples: NAS1829B6G21 = 9760-20-B-0832-999
NAS1829C6E10 = 9755-SS-0632-7

5 Pasco Hill Road • Cromwell, CT 06416-1093
Phone: 860-828-0847 • Call Toll Free: 800-243-6032 • Fax: 860-828-0381
Web Address: http://www.amatom.com • E-Mail: sales@amatom.com

AMATOM

AMATOM / NAS Cross Reference

NAS 1830 SWAGE STANDOFFS

NAS Part Number Structure

N A S 1 8 3 0 **BT** **13** **A** **03**

- BT — Material & Finish Code
- 13 — Shape/ Size Thread
- A — Shank Size
- 03 — Length

Amatom Part Number Structure

9532 - **A** - **B** - **0440** - **14**

- 9532 — Base No.
- A — Shank Size
- B — Material Code
- 0440 — Thread
- 14 — Finish Code

Please Note:
NAS and AMATOM shank codes are identical.
Insert shank code in place of brackets in the following tables.

NAS Material & Finish Codes	Description	AMATOM Codes	
		Material	Finish
A	Aluminum, Anodic Coated	A	1B
AC	Aluminum, Gold Irridite	A	17
B	Brass, Cadmium-Plate	B	999
BT	Brass, Tin Plate	B	14
C	Stainless Steel, Passivated	SS	7
H	Nylon, no finish	N	00

0256 Thread 5/32 Round	Base No. AMATOM	0256 Thread 3/16 Round	Base No. AMATOM	0440 Thread 1/4 Round	0632 Thread 1/4 Round	Base No. AMATOM
11-[ ]-02	9505	12-[ ]-02	9518	13-[ ]-02	14-[ ]-02	9531
11-[ ]-03	9506	12-[ ]-03	9519	13-[ ]-03	14-[ ]-03	9532
11-[ ]-04	9507	12-[ ]-04	9520	13-[ ]-04	14-[ ]-04	9533
11-[ ]-05	9508	12-[ ]-05	9521	13-[ ]-05	14-[ ]-05	9534
11-[ ]-06	9509	12-[ ]-06	9522	13-[ ]-06	14-[ ]-06	9535
11-[ ]-07	9510	12-[ ]-07	9523	13-[ ]-07	14-[ ]-07	9536
11-[ ]-08	9511	12-[ ]-08	9524	13-[ ]-08	14-[ ]-08	9537
				13-[ ]-09	14-[ ]-09	9538
Insert Shank Code		Insert Shank Code		13-[ ]-10	14-[ ]-10	9539
				13-[ ]-12	14-[ ]-12	9541
				13-[ ]-14	14-[ ]-14	9543
				13-[ ]-16	14-[ ]-16	9545
				13-[ ]-18	14-[ ]-18	9546
				13-[ ]-21	14-[ ]-21	9546-20
				13-[ ]-22	14-[ ]-22	9548
				13-[ ]-23	14-[ ]-23	9548-28
				13-[ ]-24	14-[ ]-24	9549

Examples NAS1830A11B06 = 9509-B-A-0256-1B
NAS1830C13C10 = 9539-C-SS-0440-7



0256 Thread 5/32 Hex	Base No. AMATOM	0256 Thread 3/16 Hex	Base No. AMATOM	0440 Thread 1/4 Hex	0632 Thread 1/4 Hex	Base No. AMATOM
01-[ ]-02	9598	02-[ ]-02	9611	03-[ ]-02	04-[ ]-02	9624
01-[ ]-03	9599	02-[ ]-03	9612	03-[ ]-03	04-[ ]-03	9625
01-[ ]-04	9600	02-[ ]-04	9613	03-[ ]-04	04-[ ]-04	9626
01-[ ]-05	9601	02-[ ]-05	9614	03-[ ]-05	04-[ ]-05	9627
01-[ ]-06	9602	02-[ ]-06	9615	03-[ ]-06	04-[ ]-06	9628
01-[ ]-07	9603	02-[ ]-07	9616	03-[ ]-07	04-[ ]-07	9629
01-[ ]-08	9604	02-[ ]-08	9617	03-[ ]-08	04-[ ]-08	9630
				03-[ ]-09	04-[ ]-09	9631
Insert Shank Code		Insert Shank Code		03-[ ]-10	04-[ ]-10	9632
				03-[ ]-12	04-[ ]-12	9634
				03-[ ]-14	04-[ ]-14	9636
				03-[ ]-16	04-[ ]-16	9638
				03-[ ]-18	04-[ ]-18	9639
				03-[ ]-21	04-[ ]-21	9639-20
				03-[ ]-22	04-[ ]-22	9641
				03-[ ]-23	04-[ ]-23	9641-28
				03-[ ]-24	04-[ ]-24	9642

Examples NAS1830AC03A06 = 9628-A-A-0440-17
NAS1830B01B02 = 9598-B-B-0256-999

5 Pasco Hill Road • Cromwell, CT 06416-1093
Phone: 860-828-0847 • Call Toll Free: 800-243-6032 • Fax: 860-828-0381
Web Address: http://www.amatom.com • E-Mail: sales@amatom.com

AMATOM

AMATOM / NAS Cross Reference

NAS 1831 Female Standoffs

NAS Part Number Structure

N A S 1 8 3 1 BT 4C08

- BT: Material & Finish Code
- 4C08: Hex Size / Thread Size

Amatom Part Number Structure

8215 - B - 0632 - 14

- 8215: Base No. Code
- B: Material
- 0632: Thread Size Code
- 14: Finish

NAS Material & Finish Codes	Description	AMATOM Codes	
		Material	Finish
A	Aluminum, Anodic Coated	A	1B
AC	Aluminum, Gold Irridite	A	17
B	Brass, Cadmium-Plate	B	999
BT	Brass, Tin Plate	B	14
C	Stainless Steel, Passivated	SS	7
H	Nylon, no finish	N	00

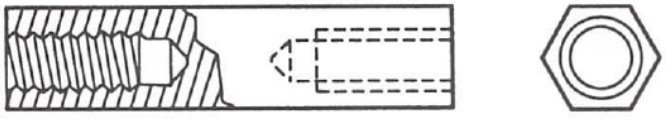

3/16 Hex 0256 Thread	3/16 Hex 0440 Thread	Base No. AMATOM	1/4 Hex 0440 Thread	1/4 Hex 0632 Thread	Base No. AMATOM
3A03	3B03	8101	4B03		8210
3A04	3B04	8102	4B04	4C04	8211
3A05	3B05	8103	4B05	4C05	8212
3A06	3B06	8104	4B06	4C06	8213
3A07	3B07	8105	4B07	4C07	8214
3A08	3B08	8106	4B08	4C08	8215
3A09	3B09	8107	4B09	4C09	8216
3A10	3B10	8108	4B10	4C10	8217
3A11	3B11	8108-44	4B11	4C11	8217-44
3A12	3B12	8109	4B12	4C12	8218
3A13	3B13	8109-52	4B13	4C13	8218-52
3A14	3B14	8110	4B14	4C14	8219
3A15	3B15	8110-60	4B15	4C15	8219-60
3A16	3B16	8111	4B16	4C16	8220
	3B17	8112	4B17	4C17	8221
	3B18	8113	4B18	4C18	8222
	3B19	8114	4B19	4C19	8223
	3B20	8115	4B20	4C20	8224
	3B21	8116	4B21	4C21	8225
	3B22	8117	4B22	4C22	8226
	3B23	8118	4B23	4C23	8227
	3B24	8119	4B24	4C24	8228
			4B25	4C25	8229
			4B26	4C26	8230
			4B28	4C28	8231
			4B30	4C30	8232
			4B32	4C32	8233
				4C34	8234
				4C36	8235
				4C38	8236
				4C40	8237
				4C42	8237-40
				4C44	8238
				4C48	8239
				4C52	8240
				4C56	8241

Example:NAS1831B3A08 = 8106-B-0256-999

5/16 Hex 0632 Thread	5/16 Hex 0832 Thread	Base No. AMATOM	3/8 Hex 0832 Thread	3/8 Hex 1032 Thread	Base No. AMATOM
5C06	5D06	8392			
5C07	5D07	8393			
5C08	5D08	8394	6D08	6E08	8573
5C09	5D09	8395	6D09	6E09	8574
5C10	5D10	8396	6D10	6E10	8575
5C11	5D11	8396-44	6D11	6E11	8575-44
5C12	5D12	8397	6D12	6E12	8576
5C13	5D13	8397-52	6D13	6E13	8576-52
5C14	5D14	8398	6D14	6E14	8577
5C15	5D15	8398-60	6D15	6E15	8577-60
5C16	5D16	8399	6D16	6E16	8578
5C17	5D17	8400	6D17	6E17	8579
5C18	5D18	8401	6D18	6E18	8580
5C19	5D19	8402	6D19	6E19	8581
5C20	5D20	8403	6D20	6E20	8582
5C21	5D21	8404	6D21	6E21	8583
5C22	5D22	8405	6D22	6E22	8584
5C23	5D23	8406	6D23	6E23	8585
5C24	5D24	8407	6D24	6E24	8586
5C25	5D25	8408	6D25	6E25	8587
5C26	5D26	8409	6D26	6E26	8588
5C28	5D28	8410	6D28	6E28	8589
5C30	5D30	8411	6D30	6E30	8590
5C32	5D32	8412	6D32	6E32	8591
5C34	5D34	8413	6D34	6E34	8592
5C36	5D36	8414	6D36	6E36	8593
5C38	5D38	8415	6D38	6E38	8594
5C40	5D40	8416	6D40	6E40	8595
5C42	5D42	8416-40	6D42	6E42	8595-40
5C44	5D44	8417	6D44	6E44	8596
5C48	5D48	8418	6D48	6E48	8597
5C52	5D52	8419	6D52	6E52	8598
5C56	5D56	8420	6D56	6E56	8599
5C60	5D60	8421	6D60	6E60	8600
5C64	5D64	8422	6D64	6E64	8601

Example: NAS1831A5C07 = 8393-A-0632-1B

5 Pasco Hill Road • Cromwell, CT 06416-1093
Phone: 860-828-0847 • Call Toll Free: 800-243-6032 • Fax: 860-828-0381
Web Address: http://www.amatom.com • E-Mail: sales@amatom.com

AMATOM®

AMATOM / MS HANDLES Cross Reference

MS HANDLES

MS P/N	AMATOM P/N
39087-1	10390-B-1032-4
-2	10390-B-1032-6A
-3	10353-B-1032-4
-4	10353-B-1032-6A
-5	10325-B-1032-4
-6	10325-B-1032-6A
39087-301AN	10100-A-0440-2
-301CB	10100-SS-0440-6B
-301CP	10100-SS-0440-7
-302AN (was 101AN)	10125-A-0632-2
-302CB (was 101CB)	10125-SS-0632-6B
-302CP (was 101CP)	10125-SS-0632-7
-303AN (was 102AN)	10135-A-0632-2
-303CB (was 102CB)	10135-SS-0632-6B
-303CP (was 102CBP)	10135-SS-0632-7
-304AN (was 103AN)	10233-A-0632-2
-304CB (was 103CB)	10233-SS-0632-6B
-304CP (was 103CP)	10233-SS-0632-7
-305AN	10233-A-0832-2
-305CB	10233-SS-0832-6B
-305CP	10233-SS-0832-7
-306AN	10242-A-0832-2
-306CB	10242-SS-0832-6B
-306CP	10242-SS-0832-7
-307AN (was 104AN)	10346-A-1032-2
-307CN (was 104CB)	10346-SS-1032-6B
-307CP (was 104CP)	10346-SS-1032-7
MS 39087-308AN (was 105AN)	10350-A-1032-2
-308CB (was 105CB)	10350-SS-1032-6B
-308CP (was 105CP)	10350-SS-1032-7
-309AN	10351-A-1032-2
-309CB	10351-SS-1032-6B
-309CP	10351-SS-1032-7
-310AN	10352-A-A1032-2
-310CB	10352-A-1032-6B
-310CP	10352-SS-1032-7
-311AN	10353-A-1032-2
-311CB	10353-SS-1032-6B
-311CP	10353-SS-1032-7
-312AN	10390-A-1032-2
-312CB	10390-SS-1032-6B
-312CP	10390-SS-1032-7
-313AN	10555-A-1032-2
-313CB	10555-SS-1032-6B
-313CP	10555-SS-1032-7
-314AN	10541-A-1032-2
-314CB	10541-SS-1032-6B
-314CP	10541-SS-1032-7
-315AN	10556-A-1032-2
-315CB	10556-SS-1032-6B
-315CP	10556-SS-1032-7
-401AN	10823-A-1024-2
-401CB	10823-SS-1024-6B
-401AP	10823-A-1024-7
39087-402AN (was 201AN)	10840-A-1032-2
-402CB (was 201CB)	10840-SS-1032-6B
-402CP (was 201CP)	10840-SS-1032-7
-403AN	10876-A-1024-2
-403CB	10876-SS-1024-6B
-403CP	10876-SS-1024-7
-404AN (was 202AN)	10860-A-1032-2
-404CB (was 202CB)	10860-SS-1032-6B
-404CP (was 202CP)	10860-SS-1032-7
-405AN (was 203AN)	10935-A-1032-2
-405CB (was 203CB)	10935-SS-1032-6B
-405CP (was 203CP)	10935-SS-1032-7
-406AN	10923-A-1024-2
-406CB	10923-SS-1024-6B
-406CP	10923-SS-1024-7
-407AN	10937-A-1024-2
-407CB	10937-SS-1024-6B
-407CP	10937-SS-1024-7
-408AN	10975-A-1032-2
-408CB	10975-SS-1032-6B
-408CP	10975-SS-1032-7
-409AN	10976-A-1024-2
-409CB	10976-SS-1024-6B
-409CP	10976-SS-1024-7
-410AN (was 204AN)	10959-A-1032-2
-410CB (was 204CB)	10959-SS-1032-6B
-410CP (was 204CP)	10959-SS-1032-7
-411AN	10979-A-1024-2
-411CB	10979-SS-1024-6B
-411CP	10979-SS-1024-7
-412AN (was 205AN)	10993-A-1032-2
-412CB (was 205CB)	10993-SS-1032-6B
-412CP (was 205CP)	10993-SS-1032-7
-413AN (was 206AN)	11148-A-1032-2
-413CB (was 206CB)	11148-SS-1032-6B
-413CP (was 206CP)	11148-SS-1032-7

Amatom manufactures a full line of MS hardware. Please call us with your MS part number requirements, we'll be glad to cross-reference the correct Amatom part number.

5 Pasco Hill Road • Cromwell, CT 06416-1093
Phone: 860-828-0847 • Call Toll Free: 800-243-6032 • Fax: 860-828-0381
Web Address: http://www.amatom.com • E-Mail: sales@amatom.com

AMATOM®

AMATOM Cross Reference

STANDOFF MATERIAL CROSS REFERENCE

This cross reference will enable you to cross the part numer you have to a different configuration in material.

Find the material size you want used, then locate the length you want. The part numbers listed under the various configurations are the first part of the part numbers in the reference manual.

If you have any questions regarding this or any information in the reference manual please call our customer service department at 1-800-243-6032.

MALE / FEMALE STANDOFFS

3/16 STOCK SIZE

LENGTH	ROUND	HEX
3/16	9723	9780
1/4	9724	9781
5/16	9725	9782
3/8	9726	9783
7/16	9727	9784
1/2	9728	9785
9/16	9729	9786
5/8	9730	9787
11/16	9731	9788
3/4	9732	9789
13/16	9733	9790
7/8	9734	9791
15/16	9735	9792
1	9736	9793

1/4 STOCK SIZE

LENGTH	ROUND	HEX
1/4	9737	9794
3/8	9738	9795
1/2	9739	9796
5/8	9740	9797
3/4	9741	9798
7/8	9742	9799
1	9743	9800
1-1/8	9744	9801
1-1/4	9745	9802
1-3/8	9746	9803
1-1/2	9747	9804
1-5/8	9748	9805
1-3/4	9749	9806
1-7/8	9750	9807
2	9751	9808

3/8 STOCK SIZE

LENGTH	ROUND	HEX
1/4	9752	9809
3/8	9753	9710
1/2	9754	9711
5/8	9755	9712
3/4	9756	9713
7/8	9757	9714
1	9758	9815
1-1/8	9759	9816
1-1/4	9760	9817
1-3/8	9761	9818
1-1/2	9762	9819
1-5/8	9763	9820
1-3/4	9764	9821
1-7/8	9765	9822
2	9766	9823
2-1/4	9767	9824
2-1/2	9768	9825
2-3/4	9769	9826
3	9770	9827
3-1/4	9771	9828
3-1/2	9772	9829
3-3/4	9773	9830
4	9774	9831
4-1/4	9775	9832
4-1/2	9776	9833
4-3/4	9777	9834
5	9778	9835
6	9779	9836

SWAGE TYPE STANDOFFS

5/32 STOCK SIZE

LENGTH	ROUND	HEX
1/8	9505	9598
3/16	9506	9599
1/4	9507	9600
5/16	9508	9601
3/8	9509	9602
7/16	9510	9603
1/2	9511	9604
9/16	9512	9605
5/8	9513	9606
11/16	9514	9607
3/4	9515	9608
7/8	9516	9609
1	9517	9610

3/16 STOCK SIZE

LENGTH	ROUND	HEX
1/8	9518	9611
3/16	9519	9612
1/4	9520	9613
5/16	9521	9614
3/8	9522	9615
7/16	9523	9616
1/2	9524	9617
9/16	9525	9618
5/8	9526	9619
11/16	9527	9620
3/4	9528	9621
7/8	9529	9622
1	9530	9623

1/4 STOCK SIZE

LENGTH	ROUND	HEX
1/8	9531	9624
3/16	9532	9625
1/4	9533	9626
5/16	9534	9627
3/8	9535	9628
7/16	9536	9629
1/2	9537	9630
9/16	9538	9631
5/8	9539	9632
11/16	9540	9633
3/4	9541	9634
13/16	9542	9635
7/8	9543	9636
15/16	9544	9637
1	9545	9638
1-1/8	9546	9639
1-1/4	9547	9640
1-3/8	9548	9641
1-1/2	9549	9642
1-3/4	9550	9643
2	9551	9644

5/16 STOCK SIZE

LENGTH	ROUND	HEX
1/8	9552	9645
3/16	9553	9646
1/4	9554	9647
5/16	9555	9648
3/8	9556	9649
7/16	9557	9650
1/2	9558	9651
9/16	9559	9652
5/8	9560	9653
11/16	9561	9654
3/4	9562	9655
13/16	9563	9656
7/8	9564	9657
15/16	9565	9658
1	9566	9659
1-1/8	9567	9660
1-1/4	9568	9661
1-3/8	9569	9662
1-1/2	9570	9663
1-3/4	9571	9664
2	9572	9665

3/8 STOCK SIZE

LENGTH	ROUND	HEX
1/8	9573	9666
3/16	9574	9667
1/4	9575	9668
5/16	9576	9669
3/8	9577	9670
1/2	9578	9672
9/16	9579	9673
5/8	9580	9674
11/16	9581	9675
3/4	9582	9676
13/16	9583	9677
7/8	9584	9678
15/16	9585	9679
1	9586	9680
1-1/8	9587	9681
1-1/4	9588	9682
1-3/8	9589	9683
1-1/2	9590	9684
1-3/4	9591	9685
2	9592	9686

5 Pasco Hill Road • Cromwell, CT 06416-1093
Phone: 860-828-0847 • Call Toll Free: 800-243-6032 • Fax: 860-828-0381
Web Address: http://www.amatom.com • E-Mail: sales@amatom.com

AMATOM

AMATOM Cross Reference

STANDOFF MATERIAL CROSS REFERENCE

FEMALE STANDOFFS

3/16 STOCK SIZE

LNGTH	RND	HEX	SQ
1/8	8075	8100	8125
3/16	8076	8101	8126
1/4	8077	8102	8127
5/16	8078	8103	8128
3/8	8079	8104	8129
7/16	8080	8105	8130
1/2	8081	8106	8131
9/16	8082	8107	8132
5/8	8083	8108	8133
3/4	8084	8109	8134
7/8	8085	8110	8135
1	8086	8111	8136
1-1/16	8087	8112	8137
1-1/8	8088	8113	8138
1-3/16	8089	8114	8139
1-1/4	8090	8115	8140
1-5/16	8091	8116	8141
1-3/8	8092	8117	8142
1-7/16	8093	8118	8143
1-1/2	8094	8119	8144
1-9/16	8095	8120	8145
1-5/8	8096	8121	8146
1-3/4	8097	8122	8147
1-7/8	8098	8123	8148
2	8099	8124	8149

1/4 STOCK SIZE

LNGTH	RND	HEX	SQ
1/8	8150	8209	8269
3/16	8151	8210	8270
1/4	8152	8211	8271
5/16	8153	8212	8272
3/8	8154	8213	8273
7/16	8155	8214	8274
1/2	8156	8215	8275
9/16	8157	8216	8276
5/8	8158	8217	8277
3/4	8159	8218	8278
7/8	8160	8219	8279
1	8161	8220	8280
1-1/16	8162	8221	8281
1-1/8	8163	8222	8282
1-3/16	8164	8223	8283
1-1/4	8165	8224	8284
1-5/16	8166	8225	8285
1-3/8	8167	8226	8286
1-7/16	8168	8227	8287
1-1/2	8169	8228	8288
1-9/16	8170	8229	8289
1-5/8	8171	8230	8290
1-3/4	8172	8231	8291
1-7/8	8173	8232	8292
2	8174	8233	8293
2-1/8	8175	8234	8294
2-1/4	8176	8235	8295
2-3/8	8177	8236	8296
2-1/2	8178	8237	8297
2-3/4	8179	8238	8298

1/4 STOCK SIZE continued

LNGTH	RND	HEX	SQ
3	8180	8239	8299
3-1/4	8181	8240	8300
3-1/2	8182	8241	8301
3-3/4	8183	8242	8302
4	8184	8243	8303
4-1/4	8185	8244	8304
4-1/2	8186	8245	8305
4-3/4	8187	8246	8306
5	8188	8247	8307

5/16 STOCK SIZE

LNGTH	RND	HEX	SQ
1/8	8329	8388	8448
3/16	8330	8389	8449
1/4	8331	8390	8450
5/16	8332	8391	8451
3/8	8333	8392	8452
7/16	8334	8393	8453
1/2	8335	8394	8454
9/16	8336	8395	8455
5/8	8337	8396	8456
3/4	8338	8397	8457
7/8	8339	8398	8458
1	8340	8399	8459
1-1/16	8341	8400	8460
1-1/8	8342	8401	8461
1-3/16	8343	8402	8462
1-1/4	8344	8403	8463
1-5/16	8345	8404	8464
1-3/8	8346	8405	8465
1-7/16	8347	8406	8466
1-1/2	8348	8407	8467
1-9/16	8349	8408	8468
1-5/8	8350	8409	8469
1-3/4	8351	8410	8470
1-7/8	8352	8411	8471
2	8353	8412	8472
2-1/8	8354	8413	8473
2-1/4	8355	8414	8474
2-3/8	8356	8415	8475
2-1/2	8357	8416	8476
2-3/4	8358	8417	8477
3	8359	8418	8478
3-1/4	8360	8419	8479
3-1/2	8361	8420	8480
3-3/4	8362	8421	8481
4	8363	8422	8482
4-1/4	8364	8423	8483
4-1/2	8365	8424	8484
4-3/4	8366	8425	8485
5	8367	8426	8486

3/8 STOCK SIZE

LNGTH	RND	HEX	SQ
1/8	8508	8567	8627
3/16	8509	8568	8628
1/4	8510	8569	8629
5/16	8511	8570	8630
3/8	8512	8571	8631

3/8 STOCK SIZE continued

LNGTH	RND	HEX	SQ
7/16	8513	8572	8632
1/2	8514	8573	8633
9/16	8515	8574	8634
5/8	8516	8575	8635
3/4	8517	8576	8636
7/8	8518	8577	8637
1	8519	8578	8638
1-1/16	8520	8579	8639
1-1/8	8521	8580	8640
1-3/16	8522	8581	8641
1-1/4	8523	8582	8642
1-5/16	8524	8583	8643
1-3/8	8525	8584	8644
1-7/16	8526	8585	8645
1-1/2	8527	8586	8646
1-9/16	8528	8587	8647
1-5/8	8529	8588	8648
1-3/4	8530	8589	8649
1-7/8	8531	8590	8650
2	8532	8591	8651
2-1/8	8533	8592	8652
2-1/4	8534	8593	8653
2-3/8	8535	8594	8654
2-1/2	8536	8595	8655
2-3/4	8537	8596	8656
3	8538	8597	8657
3-1/4	8539	8598	8658
3-1/2	8540	8599	8659
3-3/4	8541	8600	8660
4	8542	8601	8661
4-1/4	8543	8602	8662
4-1/2	8544	8603	8663
4-3/4	8545	8604	8664
5	8546	8605	8665

1/2 STOCK SIZE

LNGTH	RND	HEX
1/8	8686	8745
3/16	8687	8746
1/4	8688	8747
5/16	8689	8748
3/8	8690	8749
7/16	8691	8750
1/2	8692	8751
9/16	8693	8752
5/8	8694	8753
3/4	8695	8754
7/8	8696	8755
1	8697	8756
1-1/16	8698	8757
1-1/8	8699	8758
1-3/16	8700	8759
1-1/4	8701	8760
1-5/16	8702	8761
1-3/8	8703	8762
1-7/16	8704	8763
1-1/2	8705	8764
1-9/16	8706	8765
1-5/8	8707	8766

1/2 STOCK SIZE continued

LNGTH	RND	HEX
1-3/4	8708	8767
1-7/8	8709	8768
2	8710	8769
2-1/8	8711	8770
2-1/4	8712	8771
2-3/8	8713	8772
2-1/2	8714	8773
2-3/4	8715	8774
3	8716	8775
3-1/4	8717	8776
3-1/2	8718	8777
3-3/4	8719	8778
4	8720	8779
4-1/4	8721	8780
4-1/2	8722	8781
4-3/4	8723	8782
5	8724	8783

5/8 STOCK SIZE

LNGTH	RND	HEX
1/8	8863	8922
3/16	8864	8923
1/4	8865	8924
5/16	8866	8925
3/8	8867	8926
7/16	8868	8927
1/2	8869	8928
9/16	8870	8929
5/8	8871	8930
3/4	8872	8931
7/8	8873	8932
1	8874	8933
1-1/16	8875	8934
1-1/8	8876	8935
1-3/16	8877	8936
1-1/4	8878	8937
1-5/16	8879	8938
1-3/8	8880	8939
1-7/16	8881	8940
1-1/2	8882	8941
1-9/16	8883	8942
1-5/8	8884	8943
1-3/4	8885	8944
1-7/8	8886	8945
2	8887	8946
2-1/8	8888	8947
2-1/4	8889	8948
2-3/8	8890	8949
2-1/2	8891	8950
2-3/4	8892	8951
3	8893	8952
3-1/4	8894	8953
3-1/2	8895	8954
3-3/4	8896	8955
4	8897	8956
4-1/4	8898	8957
4-1/2	8899	8958
4-3/4	8900	8959
5	8901	8960

5 Pasco Hill Road • Cromwell, CT 06416-1093
Phone: 860-828-0847 • Call Toll Free: 800-243-6032 • Fax: 860-828-0381
Web Address: http://www.amatom.com • E-Mail: sales@amatom.com

METRIC TO INCH CONVERSION TABLE

Millimeters to decimals of an inch										
MM →	0	1	2	3	4	5	6	7	8	9
MM ↓	INCH EQUIVALENTS									
	0.00000	0.03937	0.07874	0.11811	0.15748	0.19685	0.23622	0.27559	0.31496	0.35433
10	0.39370	0.43307	0.47244	0.51181	0.55118	0.59055	0.62992	0.66929	0.70866	0.74803
20	0.78740	0.82677	0.86614	0.90551	0.94488	0.98425	1.02362	1.06299	1.10236	1.14173
30	0.18110	1.22047	1.25984	1.29921	1.33358	1.37795	1.41732	1.45669	1.49606	1.53543
40	1.57480	1.61417	1.65354	1.69291	1.73228	1.77165	1.81102	1.85039	1.88796	1.92913
50	1.96850	2.00787	2.04724	2.08661	2.12598	2.16535	2.20472	2.24409	2.28346	2.32253
60	2.36220	2.40157	2.44094	2.48031	2.51968	2.55905	2.59842	2.63779	2.67716	2.71653
70	2.75590	2.79527	2.83464	2.87401	2.91338	2.95276	2.99212	3.03149	3.07086	3.11023
80	3.14960	3.18897	3.22834	3.26771	3.30708	3.34645	3.38582	3.42519	3.46456	3.50393
90	3.54330	3.58267	3.62204	3.66141	3.70078	3.74015	3.77952	3.81889	3.85826	3.89763
100	3.93700	3.97637	4.01574	4.05511	4.09448	4.13385	4.17322	4.21259	4.25196	4.29133
110	4.33070	4.37007	4.40944	4.44881	4.48818	4.52755	4.56692	4.60629	4.64566	4.68503
120	4.72440	4.76377	4.80314	4.84251	4.38188	4.92125	4.96062	4.99999	5.03936	5.07873
130	5.11810	5.75747	5.19684	5.23621	5.27558	5.31495	5.35432	5.39369	5.43306	5.47243
140	5.51180	5.55117	5.59054	5.62991	5.66928	5.70865	5.74802	5.78739	5.82676	5.86613
150	5.90550	5.94487	5.98424	6.02361	6.06298	6.10235	6.14172.	6.18109	6.22046	6.25983
160	6.29920	6.33857	6.37794	6.41731	6.45668	6.49605	6.53542	6,57479	6.61416	6.65353
170	6.69290	6.73227	6.77164	6.81101	6.85038	6.88975	6.92912	6.96849	7.00786	7.04723
180	7.08660	7.12597	7.16534	7.20471	7.24408	7.28345	7.32282	7.36219	7.40156	7.44093
190	7.48030	7.51967	7.55904	7.59841	7.63778	7.67715	7.71622	7.75589	7.79526	7.83463
200	7.87400	7.91337	7.95274	7.99211	8.03148	8.07085	8.11022	8.14959	8.18869	8.22533
210	8.26770	8.30707	8.34644	8.38581	8.42518	8.46455	8.50392	8.54329	8.58266	8.62203
220	8.66140	8.70077	8.74014	8.77951	8.81888	8.85825	8.89762	8.93699	8.97636	9.01573
230	9.05510	9.09447	9.13384	9.17321	9.21258	9.25195	9.29132	9.33069	9.37006	9.40943
240	9.44880	9.48817	9.52754	9.56691	9.60628	9.64565	9.68502	9.72439	9.76376	9.80313
250	9.84250	9.88187	9.92124	9.96061	9.99998	10.03935	10.07872	10.11809	10.15746	10.19683
260	10.23620	10.27557	10.31494	10.35431	10.39368	10.43305	10.47242	10.51179	10.55116	10.59053
270	10.62990	10.66927	10.70864	10.74801	10.75738	10.82675	10.86612	10.90549	10.94486	10.98423
280	11.02360	11.06297	11.10234	11.14171	11.18108	11.22045	11.25982	11.29919	11,33856	11.37793
290	11.41730	11.45667	11.49604	11.53541	11.57478	11.61415	11.65352	11.69289	11.73226	11.77163

5 Pasco Hill Road • Cromwell, CT 06416-1093
Phone: 860-828-0847 • Call Toll Free: 800-243-6032 • Fax: 860-828-0381
Web Address: http://www.amatom.com • E-Mail: sales@amatom.com

FRACTIONS TO DECIMAL INCH CONVERSION TABLE

Fractional Inches	Decimal	MM
1/64	.0l5625	
1/32	.03125	
	.03937	1
3/64	.046875	
1/16	.0625	
5/64	.078125	
	.07874	2
3/32	.09375	
7/64	.109375	
	.11811	3
1/8	.125	
9/64	.140625	
5/32	.15625	
	.15748	4
11/64	.171875	
3/16	.1875	
	.19685	5
13/64	.203125	
7/32	.21875	
15/64	.234375	
	.23622	6
1/4	.250	
17/64	.265625	
	.27559	7
9/32	.28125	
19/64	.296875	
5/16	.3125	
	.31496	8
21/64	.328125	
11/32	.34375	
	.35433	9
23/64	.359375	
3/8	.375	
25/64	.390625*	
	.3937	10
13/32	.40625	
27/64	.42187;	
	.43307	11
7/16	.4375	
29/64	.453125	
	.46875	
	.47244	12
31/64	.484375	
1/2	.500	
33/64	.515625	
	.51181	13
35/64	.53125	
35/64	.546875	
	.55118	14
9/16	.5625	
37/64	.578125	
	.59055	15
19/32	.59375	
39/64	.609375	
5/8	.625	
	.62992	16
41/64	.640625	
21/32	.65625	
	.66929	17
43/64	.671875	
11/16	.6875	
45/64	.703125	
	.70866	18
23/32	.71875	
47/64	.734375	
	.74803	19
3/4	.750	
49/64	.765625	
25/32	.78125	
	.7874	20
51/64	.796875	
13/16	.8125	
	.82677	21
53/64	.828125	
27/32	.84375	
55/64	.859375	
	.86614	22
7/8	.8750	
57/64	.890625	
	.90551	23
29/32	.90625	
59/64	.921875	
15/16	.9375	
	.94488	24
61/64	.953125	
31/32	.96875	
	.98425	25
63/64	.984375	

5 Pasco Hill Road • Cromwell, CT 06416-1093
Phone: 860-828-0847 • Call Toll Free: 800-243-6032 • Fax: 860-828-0381
Web Address: http://www.amatom.com • E-Mail: sales@amatom.com

AMATOM®

Realizing the increased complexity of packaging in the design of electronic equipment, Amatom Electronic Hardware has prepared this REFERENCE MANUAL of STANDARD ELECTRONIC HARDWARE for your use in design and purchasing.

These parts are available in a wide range of sizes, materials and finishes – DIRECTLY FROM STOCK.

Terms F.O.B. Shipping Point – Net 30 days.

Credit D & B rating or three (3) commercial companies you now purchase from on open account and the name and address of your bank. All new accounts are subject to approval by the Amatom Credit Department.

Cancellations Orders may be cancelled or deliveries deferred only upon the condition that the Buyer assumes liability and makes payment to the Seller for all work, whether in process or complete at time of notification.

Returns No returns will be accepted without prior authorization of our Sales Department. Return to have name of person who authorized return.

Shipments Stock items will be shipped to quantities ordered. Made to order items will be shipped up to plus or minus 10%.

Quotations Prices quoted are valid for 30 days. Typographical, clerical and key punch errors are subject to correction.

Shipping We take the greatest care in packing and shipping merchandise so that it will arrive at its destination in good condition. Our responsibility ends when the shipment is delivered to the carrier. In case of loss or damage, the buyer should immediately file a claim with the carrier.

Specifications The specifications as listed in this manual are purely functional. Amatom reserves the right to make changes in specifications or tolerances at any time without notice, as long as parts remain functional for same application.

We Accept . . .

VISA MasterCard

5 Pasco Hill Road • Cromwell, CT 06416-1093
Phone: 860-828-0847 • Call Toll Free: 800-243-6032 • Fax: 860-828-0381
Web Address: http://www.amatom.com • E-Mail: sales@amatom.com

AMATOM®

NUMERICAL INDEX

Part Number	Description	Section	Page Number
488 to 580	Bushings	Bushings	237
2199 to 2376	Flat Washers	Washers	183-188
2550 to 2771	Shoulder Washers	Washers	189-236
4382-1 to 4382-4	Retaining Ring	Captive Hardware	87, 89
4431 to 4433	Jackscrew Hardware	Standoffs	35
5616 to 5617	Springs	Captive Hardware	85, 89
6100 to 6227	Captive Screws	Captive Hardware	69-75
6230 to 6242	Captive Screws	Captive Hardware	79
6250 to 6324	Retainers	Captive Hardware	80-92
6700 to 6704	Panel Washers	Captive Hardware	74
6760 to 6769	Captive Screws	Captive Hardware	77
7451 to 7477	Precision Shoulder Screw	Captive Hardware	77
8075 to 8960	Female Standoffs	Standoffs/Spacers	10-19
9200 to 9345	Spacers	Standoffs/Spacers	20
*9505 to 9722	Swage Standoffs	Standoffs	21-30
9723 to 9836	Male/Female Standoffs	Standoffs	31-34
9837	Jackscrews	Standoffs	35
10010 to 11658	Handles	Handles	104-127
11705 to 13076	Folding Handles	Handles	128-154
13110 to 13732	Offset/Slanted Handles	Handles	155-163
13745 to 14076	Bar Handles	Handles	164-166
14050 to 14066	Folding Handles	Handles	167-168
15101 to 15142	Contemporary Handles	Handles	172-173
16000 to 16030	Ferrules	Handles	169-170
17300 to 17417	Hinged Standoffs	Standoffs	36-39
*18091 to 18315	Anti Rotation Standoffs	Standoffs	40
19000 to 19498	Metric Female Standoffs	Metric	45-49
19500 to 19748	Metric Spacers	Metric	50
*19780 to 19928	Metric Swage Standoffs	Metric	51-53
*19930 to 20046	Male/Female Standoffs	Metric	54-56
21001 to 21149	Anti Rotation Standoffs	Metric	57-60
80300 to 80309	Hi-Tech Handle	Handles	174
80428 to 80465	Standard Locking Handles	Handles	178
80820 to 80830	Compact, Low Profile Locking	Handles	177
81100 to 81129	Spring Loaded Handles	Handles	178

*Swage tooling for installation are available. See punch and anvil chart listed on each page.

5 Pasco Hill Road • Cromwell, CT 06416-1093
Phone: 860-828-0847 • Call Toll Free: 800-243-6032 • Fax: 860-828-0381
Web Address: http://www.amatom.com • E-Mail: sales@amatom.com

AMATOM®

NOTES

AMATOM®

NOTES

AMATOM®

NOTES

AMATOM®

©2004, Amatom Electronic Hardware Company
Amatom® is a registered trademark of Amatom Electronic Hardware Company



Toll Free: 800-243-6032 ■ www.amatom.com
5 Pasco Hill Road ■ Cromwell, CT 06416-1093 ■ Phone: (860) 828-0847 ■ Fax: (860) 828-0381